REF Schematic for RK3568/RK3568B2 Tablet

Main Functions Introduction

1)Charger/PMIC: 1Cell Battery + RK817-5 Charger
Option: 1Cell Battery + Quick Charger + RK809-5
Option: 2Cell Battery + Quick Charger + RK809-5
2)RAM: LPDDR4/4x 1X32bit(200ball)
Option:DDR3 4x16bit
Option:DDR4 2x16bit
Option:DDR4 4x16bit
Option:LPDDR3 1x32bit(178ball)
3)ROM: eMMC
Option:Nand Flash
4)Support:1 x Micro SD Card3.0
5)Support:1 x USB TypeC(with USB3.0 OTG)
Option:1 x MircoUSB2.0
6)Support:1 x USB3.0 HOST1 + 1 x USB2.0 HOST2
7)Support:4G module Via MiniPCIe2.0 Slot With PCIE2.0 and USB2.0 HOST3 function
8)Support:PCIE3.0 M.2 SSD KEY B/M Connector
9)Support:1 x HDMI2.0 TX
10)Support:1 x LCM MIPI DSI TX0
Option:1 x LCM MIPI DSI TX1
Option:1 x LCM LVDS TX0
Option:1 x LCM LVDS TX1
Option:1 x LCM Dual MIPI DSI TX
Option:1 x LCM Dual LVDS TX
Option:1 x LCM eDP TX
11)Support:1 x 4Lanes Camera MIPI CSI RX + Parallel CIF Camera
Option:2 x 2Lanes Camera MIPI CSI RX
Option:1 x 4Lanes or 1 x 2Lanes Camera MIPI CSI RX
12)Support:a/b/g/n/ac 2X2 SDIO WIFI5+BT5.0+PCM
Option:a/b/g/n/ac 1X1 SDIO WIFI+BT+PCM
Option:a/b/g/n/ac/ax 2X2 PCIe WIFI6+BT5.0+PCM
Option:PCIe2.0 M.2 KEY E Connector
13)Support:1 x Headphone output
14)Support:1 x ECM MIC + 1 x Speaker out
Option:4 x MEMS MIC + 1 x Speaker out + Loopback or 2 x MEMS MIC + 1 x Speaker out + Loopback
Option:4 x MEMS MIC + 2 x Speaker out + Loopback
15)Support:Gyroscope + Accelerometer + Motion + Hall + Ambient & Proximity
16)Support:Array Key(MENU,VOL+,VOL-,ESC),Reset,Power on/off Key
17)Support:Debug UART

Rockchip Confidential

Rockchip 瑞芯微电子	Rockchip Electronics Co., Ltd				
Project:	RK3568_Tablet_REF_SCH				
File:	00.Cover Page				
Date:	Wednesday, September 27, 2023			Rev:	V2.0
Designed by:	Zhangdz	Reviewed by:	Default	Sheet:	1 of 62

Table of Content

Page 1	00.Cover Page	Default
Page 2	01.Index and Notes	Default
Page 3	02.Revision History	Default
Page 4	03.Block Diagram	Default
Page 5	04.Power Diagram-1Cell RK817	Default
Page 6	05.Power Diagram-1Cell QC+RK809	Option
Page 7	06.Power Diagram-2Cell QC+RK809	Option
Page 8	07.IO Power Domain Map	Default
Page 9	08.I2C Bus Map	Default
Page 10	09.PCIE30/MULTI_PHY/VOP Fun Map	Default
Page 11	10.RK3568_Power/GND	Default
Page 12	11.RK3568_DDR PHY	Default
Page 13	12.RK3568_OSC/PLL/PMUIO	Default
Page 14	13.RK3568_Flash/SD Controller	Default
Page 15	14.RK3568_USB/PCIe/SATA PHY	Default
Page 16	15.RK3568_SARADC/GPIO	Default
Page 17	16.RK3568_VI Interface	Default
Page 18	17.RK3568_VO Interface_1	Default
Page 19	18.RK3568_VO Interface_2	Default
Page 20	19.RK3568_Audio Interface	Default
Page 21	20.Power_1Cell_CHG_RK817-5	Default
Page 22	21.Power_1Cell_QC_RK809-5	Option
Page 23	22.Power_2Cell_QC_RK809-5	Option
Page 24	23.Power_Ext Discrete	Default
Page 25	24.Power_Flash Power Manage	Default
Page 26	25.USB2/USB3 HOST Port	Default
Page 27	31.DRAM-DDR3_4X16Bit_96P	Option
Page 28	33.DRAM-DDR4_2x16bit_96P	Option
Page 29	34.DRAM-DDR4_4x16Bit_96P	Option
Page 30	36.DRAM-LPDDR3_1X32bit_178P	Option
Page 31	38.DRAM-LPDDR4X_1X32bit_200P	Default
Page 32	40.Flash-eMMC Flash	Default
Page 33	41.Flash-Nand Flash	Option
Page 34	42.Flash-MicroSD Card	Default
Page 35	45.VI-Camera_Power	Default
Page 36	46.VI-Camera_CIF	Default
Page 37	47.VI-Camera_MIPI_CSI_1x 4Lanes	Default
Page 38	48.VI-Camera_MIPI_CSI_2x 2Lanes	Option
Page 39	49.VI-Camera_MIPI_CSI_4or2Lanes	Option
Page 40	50.VO-HDMI2.0 TX	Default
Page 41	52.VO-LCM_Single MIPI _DSI TX	Default
Page 42	53.VO-LCM_Dual MIPI_DSI TX	Option
Page 43	54.VO-LCM_LVDS TX0/TX1	Option
Page 44	55.VO-LCM_Dual LVDS TX	Option
Page 45	56.VO-LCM_eDP TX	Option
Page 46	58.TP Connector_COF	Option
Page 47	59.TP_Connector-COB	Default
Page 48	60.WIFI/BT-SDMMC1_1T1R + UART	Option
Page 49	62.WIFI/BT-SDMMC1_2T2R + UART	Default
Page 50	64.WIFI6/BT-PCIe_2T2R + UART	Option
Page 51	65.WIFI/BT-M.2_KEY_E	Option
Page 52	70.Audio-Headphone Port	Default
Page 53	71.Audio-SingleMic+RK809_SPK	Default
Page 54	72.Audio-MicArray+RK809_SPK	Option
Page 55	74.Audio-MicArray+EXT Dual_SPK	Option
Page 56	87.MiniPCIe2.0 Slot_With 4G Fun	Option
Page 57	89.PCIE-M.2 SSD_KEY_B_M	Option
Page 58	90.Sensors	Default
Page 59	91.Debug UART	Default
Page 60	92.KEY Array	Default
Page 61	93.HW_ID/BOM_ID	Default
Page 62	99.Mark/Hole/Heatsink	Default
Page 63		
Page 64		
Page 65		
Page 66		
Page 67		
Page 68		
Page 69		
Page 70		
Page 71		
Page 72		
Page 73		
Page 74		
Page 75		
Page 76		

Description

Note

Option

Generate Bill of Materials

Header:

Item\tPart\tDescription\tPCB Footprint\tReference\tQuantity\tOption

Combined property string:

{Item}\t{Value}\t{Description}\t{PCB Footprint}\t{Reference}\t{Quantity}\t{Option}

Notes

NOTE 1:
Component parameter description
1. DNP stands for component not mounted temporarily
2. If Value or option is DNP, which means the area is reserved without being mounted

NOTE 2:
Please use our recommended components to avoid too many changes.
For more informations about the second source,please refer to our AVL.

Rockchip Confidential

Revision History

Version	Date	By	Change Dsecription	Approved
V1.0	2021-07-20	Zhangdz	1:Revision preliminary version	
V2.0	2023-09-27	Zhangdz	1:Change content Please Refer to: RK3568_Tablet_REF_SCH_V20_20230927_Modify_Notes	

Rockchip Confidential

RK3568 Tablet Ref Block Diagram for 1-Cell Charger use RK817-5

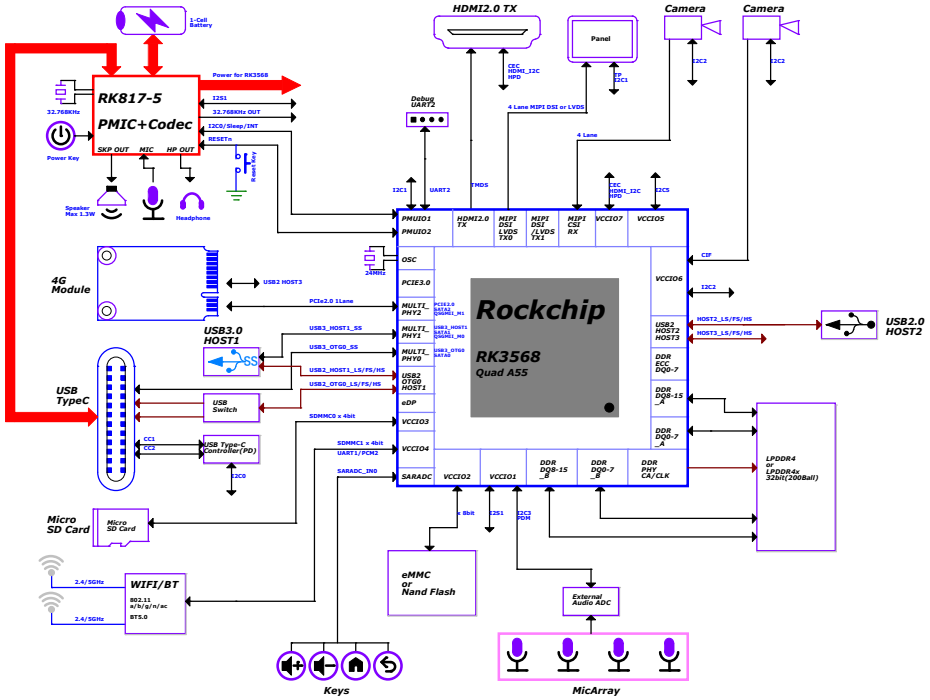

RK3568 Tablet Ref Block Diagram for 1-Cell Quick Charger use BQ25890/SY6970

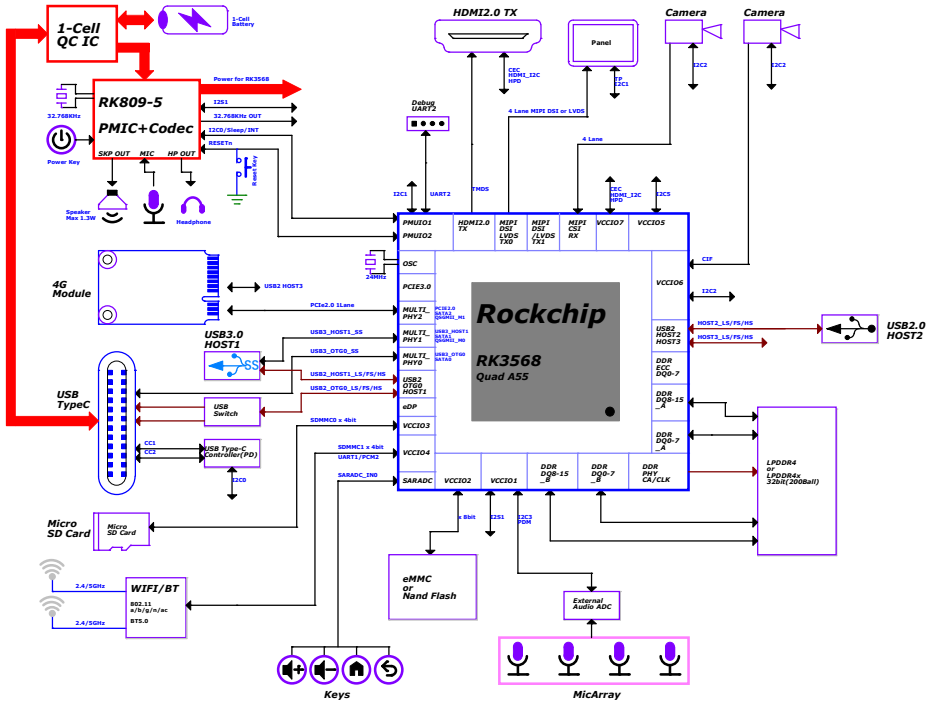

RK3568 Tablet Ref Block Diagram for 2-Cell Quick Charger use BQ25703/SC8886

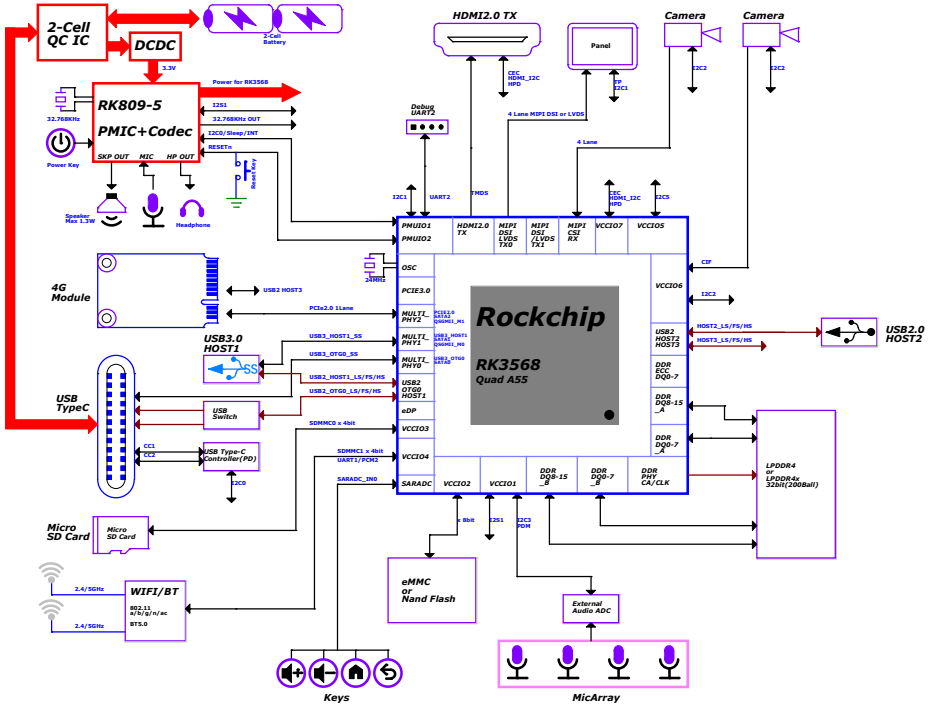

Rockchip Confidential

Rockchip SECRET — Rockchip Electronics Co., Ltd
Project: RK3568_Tablet_REF_RK8
File: 03.Block Diagram
Date: Wednesday, August 17, 2022 | Size: A3 | Rev: 1.0
Drawn by: Rongxin | Reviewed by: Kelian | Sheet: 4 of 10

Power Sequence(Use RK817-5)

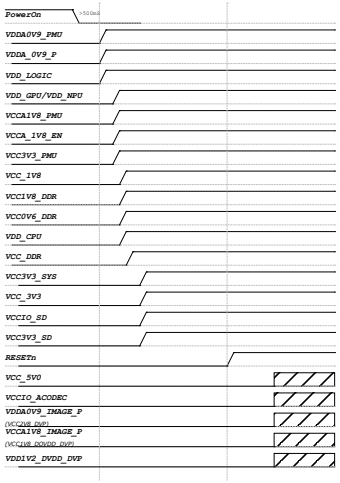

Power description(Use RK817-5)

Power Supply	PMIC Channel	Supply Limit	Power Name	Time Slot	Default Voltage	Default ON/OFF	Work Voltage	Peak Current	Sleep Current
VCC_SYSIN	RK817_BUCK1	2.5A	VDD_LOGIC	Slot:1	0.9V	ON	0.9V	TBD	TBD
VCC_SYSIN	RK817_BUCK2	2.5A	VDD_GPU/VDD_NPU	Slot:2	0.9V	ON	DVFS	TBD	TBD
VCC_SYSIN	RK817_BUCK3	1.5A	VCC_DDR	Slot:3	ADJ (0.6~0.8V)	ON	1.1V (LPDDR4/4x)	TBD	TBD
VCC_SYSIN	RK817_BUCK4	1.5A	VCC3V3_SYS	Slot:4	3.3V	ON	3.3V	TBD	TBD
VCC_SYSIN	RK817_LDO1	0.4A	VCCA1V8_PMU	Slot:2	1.8V	ON	1.8V	TBD	TBD
	RK817_LDO2	0.4A	VDDA_0V9_P	Slot:1	0.9V	ON	0.9V	TBD	TBD
	RK817_LDO3	0.1A	VDDA0V9_PMU	Slot:1	0.9V	ON	0.9V	TBD	TBD
VCC_SYSIN	RK817_LDO4	0.4A	VCCIO_ACODEC	N/A	0V	OFF	3.3V	TBD	TBD
	RK817_LDO5	0.4A	VCCIO_SD	Slot:4	3.3V	ON	3.3V or 1.8V (SD card)	TBD	TBD
	RK817_LDO6	0.4A	VCC3V3_PMU	Slot:2	3.3V	ON	3.3V	TBD	TBD
VCC_SYSIN	RK817_LDO7	0.4A	VCCA_1V8_EN	Slot:2	1.8V	ON	1.8V	TBD	TBD
	RK817_LDO8	0.4A	VDDA0V9_IMAGE_P (VCCA0_DVP)	N/A	0V	OFF	2.8V (Camera)	TBD	TBD
	RK817_LDO9	0.4A	VCCA1V8_IMAGE_P (VCCA0_DOVDD_DVP)	N/A	0V	OFF	1.8V (Camera)	TBD	TBD
VCC_SYSIN	BOOST	1.5A	VCC_5V0	N/A	0V	OFF	5.0V	TBD	TBD
	RK817_RESETn			Slot:4+5					
VCC_SYSIN	EXT BUCK	5.0A	VDD_CPU	Slot:2A	1.0V	ON	DVFS	TBD	TBD
VCC_SYSIN	EXT BUCK	1.0A	VCC_1V8	Slot:2A	1.8V	ON	1.8V	TBD	TBD
VCC_SYSIN	EXT LDO	0.3A	VCC1V8_DDR	Slot:2A	1.8V	ON	1.8V	TBD	TBD
VCC_SYSIN	EXT BUCK	2.0A	VCC0V6_DDR	Slot:2A	0.6V	ON	0.6V	TBD	TBD
VCC3V3_SYS	EXT MOS		VCC_3V3	Slot:4	3.3V	ON	3.3V	TBD	TBD
VCC3V3_SYS	EXT MOS		VCC3V3_SD	Slot:4	3.3V	ON	3.3V	TBD	TBD
VCC_SYSIN	EXT LDO or BUCK	0.5A (1.0A)	VDD1V2_DVDD_DVP	N/A	0V	OFF	1.2V (Camera)	TBD	TBD

Power Diagram for 1-Cell Charger use RK817-5

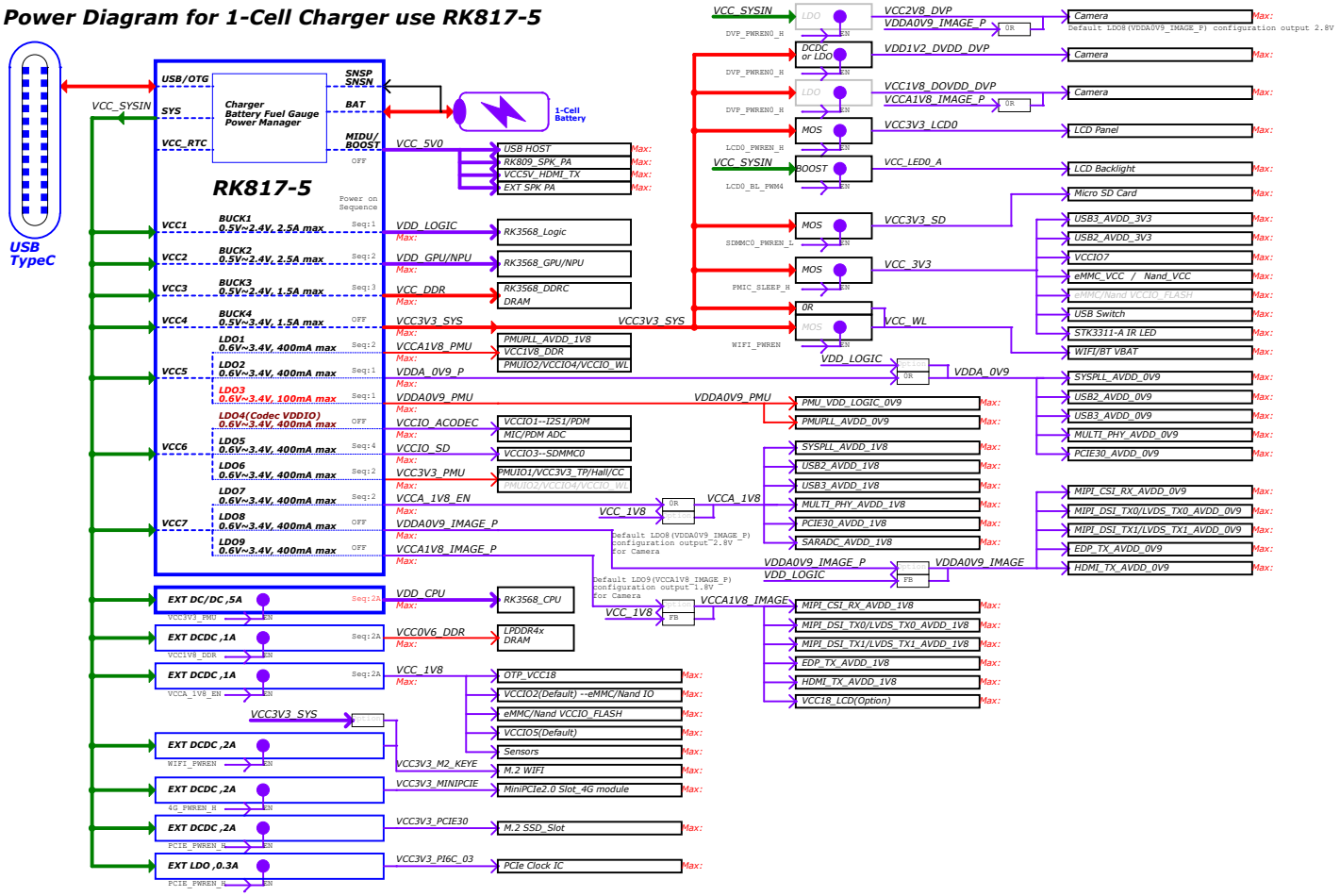

Rockchip Confidential

Power Sequence(Use RK809-5)

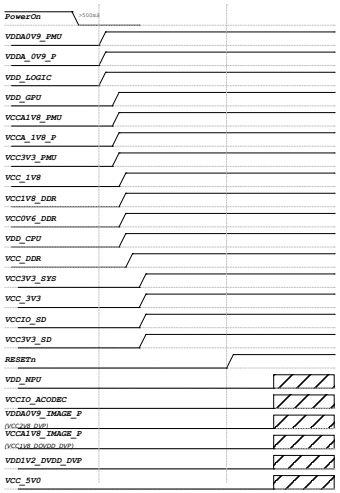

Power description(Use RK809-5)

Power Supply	PMIC Channel	Supply Limit	Power Name	Time Slot	Default Voltage	Default ON/OFF	Work Voltage	Peak Current	Sleep Current
VCC_SYSIN	RK809_BUCK1	2.5A	VDD_LOGIC	Slot:1	0.9V	ON	0.9V	TBD	TBD
VCC_SYSIN	RK809_BUCK2	2.5A	VDD_GPU	Slot:2	0.9V	ON	DVFS	TBD	TBD
VCC_SYSIN	RK809_BUCK3	1.5A	VCC_DDR	Slot:3	ADJ FB=0.8V	ON	1.2V (DDR4)	TBD	TBD
VCC_SYSIN	RK809_BUCK4	1.5A	VDD_NPU	N/A	0V	OFF	DVFS	TBD	TBD
VCC_SYSIN	RK809_LDO1	0.4A	VDDA0V9_IMAGE_P (VCC2V8_DVP)	N/A	0V	OFF	2.8V (Camera)	TBD	TBD
	RK809_LDO2	0.4A	VDDA_0V9	Slot:1	0.9V	ON	0.9V	TBD	TBD
	RK809_LDO3	0.1A	VDDA0V9_PMU	Slot:1	0.9V	ON	0.9V	TBD	TBD
VCC_SYSIN	RK809_LDO4	0.4A	VCCIO_ACODEC	N/A	0V	OFF	3.3V	TBD	TBD
	RK809_LDO5	0.4A	VCCIO_SD	Slot:4	3.3V	ON	3.3V or 1.8V (SD3.0 or SD2.0)	TBD	TBD
	RK809_LDO6	0.4A	VCC3V3_PMU	Slot:2	3.3V	ON	3.3V	TBD	TBD
VCC_SYSIN	RK809_LDO7	0.4A	VCCA_1V8	Slot:2	1.8V	ON	1.8V	TBD	TBD
	RK809_LDO8	0.4A	VCCA1V8_PMU	Slot:2	1.8V	ON	1.8V	TBD	TBD
	RK809_LDO9	0.4A	VCCA1V8_IMAGE_P (VCC1V8_DOVDD_DVP)	N/A	0V	OFF	1.8V (Camera)	TBD	TBD
VCC3V3_SYS	RK809_SW2	2.1A	VCC3V3_SD	Slot:4	3.3V	ON	3.3V	TBD	TBD
VCC_SYSIN	RK809_SW1	2.1A	N/A						
	RK809_BUCK5	2.5A	VCC_1V8	Slot:2	1.8V	ON	1.8V	TBD	TBD
	RK809_RESETn			Slot:4+5					
VCC_SYSIN	EXT BUCK	5.0A	VDD_CPU	Slot:2A	1.0V	ON	DVFS	TBD	TBD
VCC_SYSIN	EXT LDO	0.3A	VCC1V8_DDR	Slot:2A	1.8V	ON	1.8V	TBD	TBD
VCC_SYSIN	EXT BUCK	2.0A	VCC0V6_DDR	Slot:2A	0.6V	ON	0.6V	TBD	TBD
VCC3V3_SYS	EXT MOS		VCC_3V3	Slot:4	3.3V	ON	3.3V	TBD	TBD
VCC_SYSIN	EXT LDO or BUCK	0.5A /1.0A	VDD1V2_DVDD_DVP	N/A	0V	OFF	1.2V (Camera)	TBD	TBD
VCC_SYSIN	EX BOOST	1.5A	VCC_5V0	N/A	0V	OFF	5.0V	TBD	TBD

Power Diagram for 1-Cell Quick Charger use BQ25890/SY6970

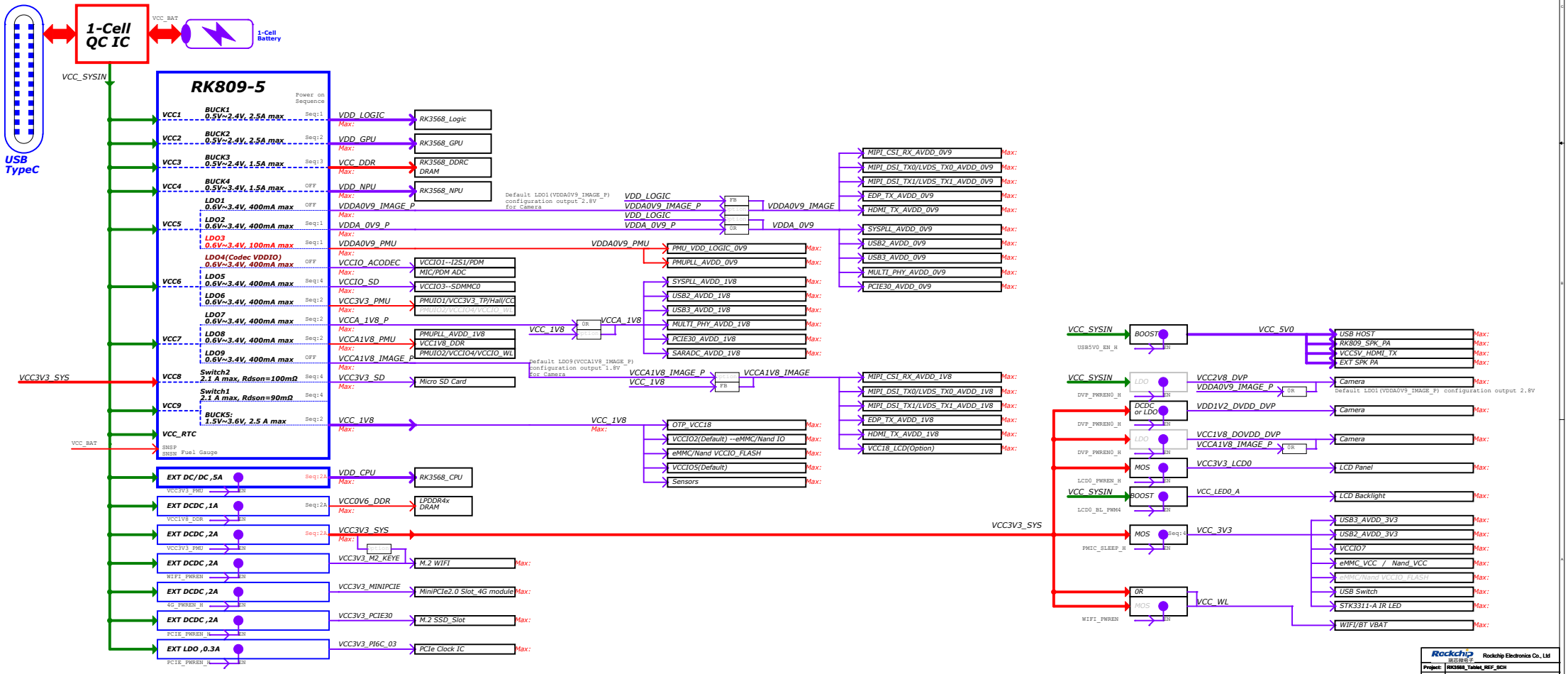

Rockchip Confidential

Rockchip Electronics Co., Ltd

Project:	RK3568_Tablet_REF_SCH
File:	06.Power Diagram-1Cell QC+RK809
Date:	Wednesday, September 27, 2023
Rev:	V2.0
Designed by:	Zhangqk
Reviewed by:	Default
Sheet:	6 of 63

Power Sequence(Use RK809-5)

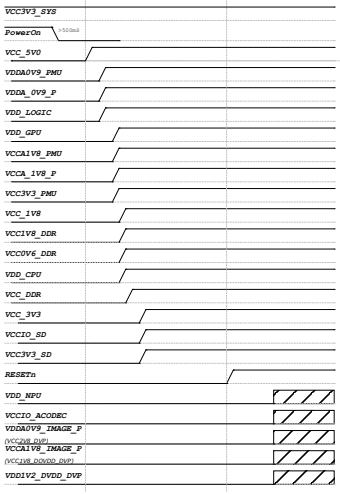

Power description(Use RK809-5)

Power Supply	PMIC Channel	Supply Limit	Power Name	Time Slot	Default Voltage	Default ON/OFF	Work Voltage	Peak Current	Sleep Current
VCC3V3_SYS	RK809_BUCK1	2.5A	VDD_LOGIC	Slot:1	0.9V	ON	0.9V	TBD	TBD
VCC3V3_SYS	RK809_BUCK2	2.5A	VDD_GPU	Slot:2	0.9V	ON	DVFS	TBD	TBD
VCC3V3_SYS	RK809_BUCK3	1.5A	VCC_DDR	Slot:3	ADJ FB=0.8V	ON	1.2V (DDR4)	TBD	TBD
VCC3V3_SYS	RK809_BUCK4	1.5A	VDD_NPU	N/A	0V	OFF	DVFS	TBD	TBD
VCC3V3_SYS	RK809_LDO1	0.4A	VDDA0V9_IMAGE_P (VCC2V8_DVP)	N/A	0V	OFF	2.8V (Camera)	TBD	TBD
	RK809_LDO2	0.4A	VDDA_0V9	Slot:1	0.9V	ON	0.9V	TBD	TBD
	RK809_LDO3	0.1A	VDDA0V9_PMU	Slot:1	0.9V	ON	0.9V	TBD	TBD
VCC3V3_SYS	RK809_LDO4	0.4A	VCCIO_ACODEC	N/A	0V	OFF	3.3V	TBD	TBD
	RK809_LDO5	0.4A	VCCIO_SD	Slot:4	3.3V	ON	3.3V or 1.8V (SD card)	TBD	TBD
	RK809_LDO6	0.4A	VCC3V3_PMU	Slot:2	3.3V	ON	3.3V	TBD	TBD
VCC3V3_SYS	RK809_LDO7	0.4A	VCCA_1V8	Slot:2	1.8V	ON	1.8V	TBD	TBD
	RK809_LDO8	0.4A	VCCA1V8_PMU	Slot:2	1.8V	ON	1.8V	TBD	TBD
	RK809_LDO9	0.4A	VCCA1V8_IMAGE_P (VCC1V8_DOVDD_DVP)	N/A	0V	OFF	1.8V (Camera)	TBD	TBD
VCC3V3_SYS	RK809_SW2 (Boost)	2.1A	VCC3V3_SD	Slot:4	3.3V	ON	3.3V	TBD	TBD
VCC3V3_SYS	RK809_SW1 (Buck)	2.1A	VCC_3V3	Slot:4	3.3V	ON	3.3V	TBD	TBD
	RK809_BUCK5	2.5A	VCC_1V8	Slot:2	1.8V	ON	1.8V	TBD	TBD
	RK809_RESETn			Slot:4+5					
VCC_SYSIN	EXT BUCK	3A	VCC3V3_SYS	Slot:0	3.3V	ON	3.3V	TBD	TBD
VCC_SYSIN	EXT BUCK	3A	VCC_5V0	Slot:0	5.0V	ON	5.0V	TBD	TBD
VCC_5V0	EXT BUCK	5.0A	VDD_CPU	Slot:2A	1.0V	ON	DVFS	TBD	TBD
VCC_5V0	EXT LDO	0.3A	VCC1V8_DDR	Slot:2A	1.8V	ON	1.8V	TBD	TBD
VCC_5V0	EXT BUCK	2.0A	VCC0V6_DDR	Slot:2A	0.6V	ON	0.6V	TBD	TBD
VCC3V3_SYS	EXT LDO or BUCK	0.5A (1.0A)	VDD1V2_DVDD_DVP	N/A	0V	OFF	1.2V (Camera)	TBD	TBD

Power Diagram for 2-Cell Quick Charger use BQ25703/SC8886

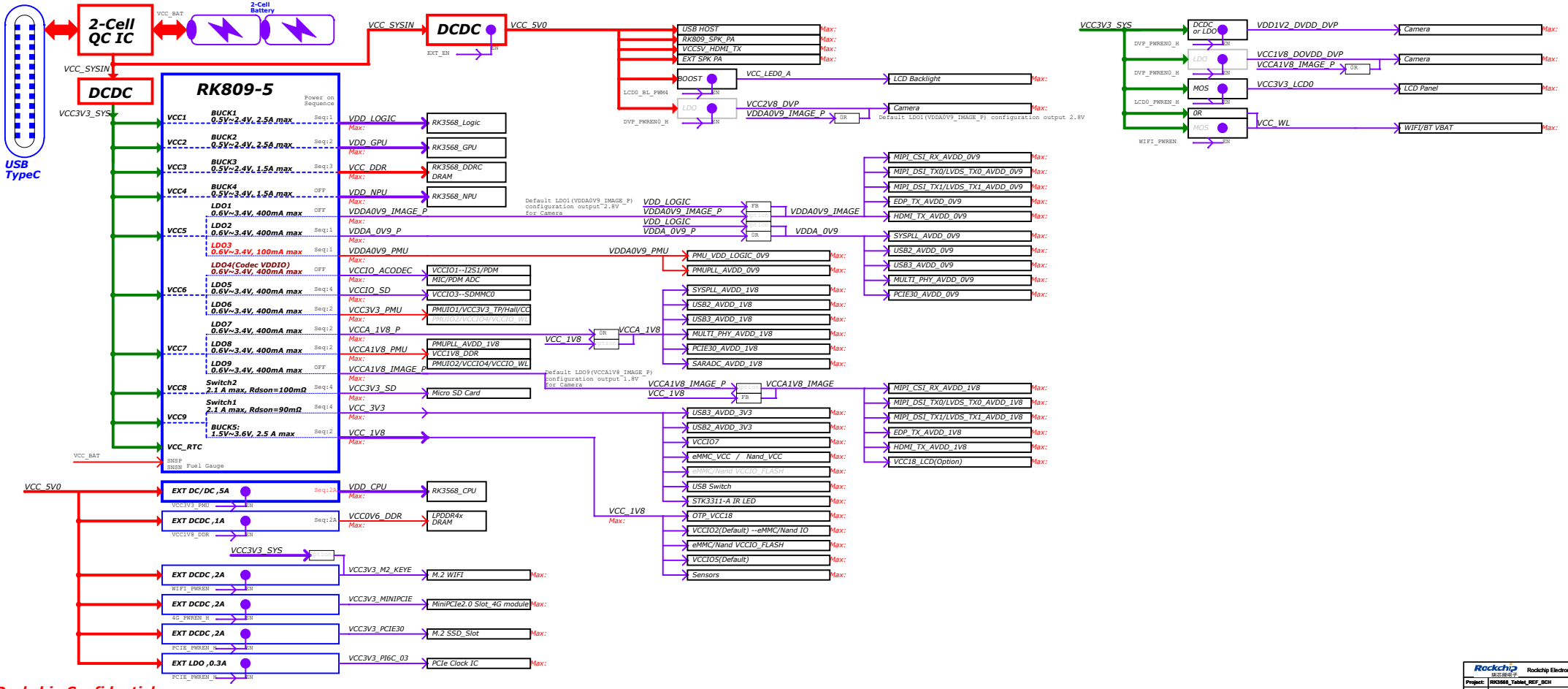

Rockchip Confidential

Rockchip Electronics Co., Ltd

Project:	RK3568_Tablet_REF_SCH
File:	06.Power Diagram-2Cell QC+RK809
Date:	Wednesday, September 27, 2023
Rev:	V2.0
Designed by:	Zhangjk
Reviewed by:	Default
Sheet:	7 of 63

IO Power Domain Map

If IO domain power voltage is adjusted, the software DTS configuration must be updated synchronously, otherwise the IO may be damaged!

IO Domain	Pin Num	Support IO Voltage		Notes	Default IO Domain Voltage		
		3.3V	1.8V		Supply Power Net Name	Power Source	Voltage
PMUIO0 (PMUPLL_AVDD_1V8)	Pin Y21	✗	✓	PMUIO0 are fixed 1.8V level mode, which cannot be configured.	VCCA1V8_PMU	VCCA1V8_PMU	1.8V
PMUIO1	Pin Y20	✓	✗	PMUIO1 are fixed 3.3V level mode, which cannot be configured.	VCC3V3_PMU	VCC3V3_PMU	3.3V
PMUIO2	Pin W19	✓	✓	PMUIO2 supports 1.8V or 3.3V level mode Support configurable but require that their hardware power supply voltages must be consistent with the software configuration correspondingly.[2]	PMUIO2	VCCA1V8_PMU	1.8V
VCCIO1	Pin H17	✓	✓	VCCIO1 supports 1.8V or 3.3V level mode Support configurable but require that their hardware power supply voltages must be consistent with the software configuration correspondingly.[2]	VCCIO_ACODEC	VCCIO_ACODEC	3.3V
VCCIO2	Pin H18	✓	✓	VCCIO2 supports 1.8V or 3.3V level mode Default is configured by hardware,namely PIN "FLASH_VOL_SEL" state determines which mode to work in.[1][2]	VCCIO_FLASH	VCC_1V8	1.8V
VCCIO3	Pin L22	✓	✓	VCCIO3 supports 1.8V or 3.3V level mode Support configurable but require that their hardware power supply voltages must be consistent with the software configuration correspondingly.[2][3]	VCCIO_SD	VCCIO_SD	SD2.0 3.3V SD3.0 1.8V
VCCIO4	Pin J21	✓	✓	VCCIO4 supports 1.8V or 3.3V level mode Support configurable but require that their hardware power supply voltages must be consistent with the software configuration correspondingly.[2]	VCCIO_WL	VCCA1V8_PMU	1.8V
VCCIO5	Pin V10 Pin V11	✓	✓	VCCIO5 supports 1.8V or 3.3V level mode Support configurable but require that their hardware power supply voltages must be consistent with the software configuration correspondingly.[2]	VCC_1V8	VCC_1V8	1.8V
VCCIO6	Pin R9 Pin U9	✓	✓	VCCIO6 supports 1.8V or 3.3V level mode Support configurable but require that their hardware power supply voltages must be consistent with the software configuration correspondingly.[2]	VCC1V8_DOVDD_DVP	VCC1V8_DOVDD_DVP	1.8V
VCCIO7	Pin V12	✓	✓	VCCIO7 supports 1.8V or 3.3V level mode Support configurable but require that their hardware power supply voltages must be consistent with the software configuration correspondingly.[2]	VCC_3V3	VCC_3V3	3.3V

Notes

According to the WiFi module selected: Option VCC3V3_PMU

If a board needs to be compatible with two voltage choices, recommended to enable BOM ID

For example, the VCCIO4 hardware has been modified to 3.3V power supply, and the corresponding DTS must be modified to 3.3V configuration, otherwise the IO of VCCIO4 will be damaged.

If a board needs to be compatible with two voltage choices, recommended to enable BOM ID

Notes

[1]:When VCCIO2 voltage is connected to 1.8V, FLASH_VOL_SEL must be high
When VCCIO2 voltage is connected to 3.3V, FLASH_VOL_SEL must be low
If VCCIO2 power supply voltage and FLASH_VOL_SEL fails to meet the above relationship, its function will be abnormally(for example, it cannot be started normally) or IO will be damaged.

[2]:When the IO domain power supply voltage is 1.8V, the IO domain voltage configuration in DTS must be set to 1.8V mode.
If it is misconfigured to 3.3V mode, the IO function of this power domain will be abnormally;
When the IO domain power supply voltage is 3.3V, the IO domain voltage configuration in DTS must be set to 3.3V mode.
If it is misconfigured to 1.8V mode, the IO in this power domain will be in overvoltage state, and the IO will be damaged after long-term operation.

[3]:When VCCIO3 IO domain is assigned as SD card function,:
If SD3.0 mode is to be supported, VCCIO3 power supply voltage must be support configurable, 3.3V in SD2.0 mode and 1.8V in SD3.0 mode.
If only SD2.0 mode is supported (SD3.0 card only works in SD2.0 mode), VCCIO3 only needs fixed power supply of 3.3V.
When VCCIO3 IO domain is assigned as other function,:
Such as uart5 and uart6, then note [2] should be followed

Rockchip Confidential

Default I2C Map

Note:
M0 M1 M2 indicates that the same function is multiplexed to different IO. When selecting, only M0 or M1 or M2 can be selected
eg:
Not supported I2C1_SCL_M0 and I2C1_SDA_M1 combination

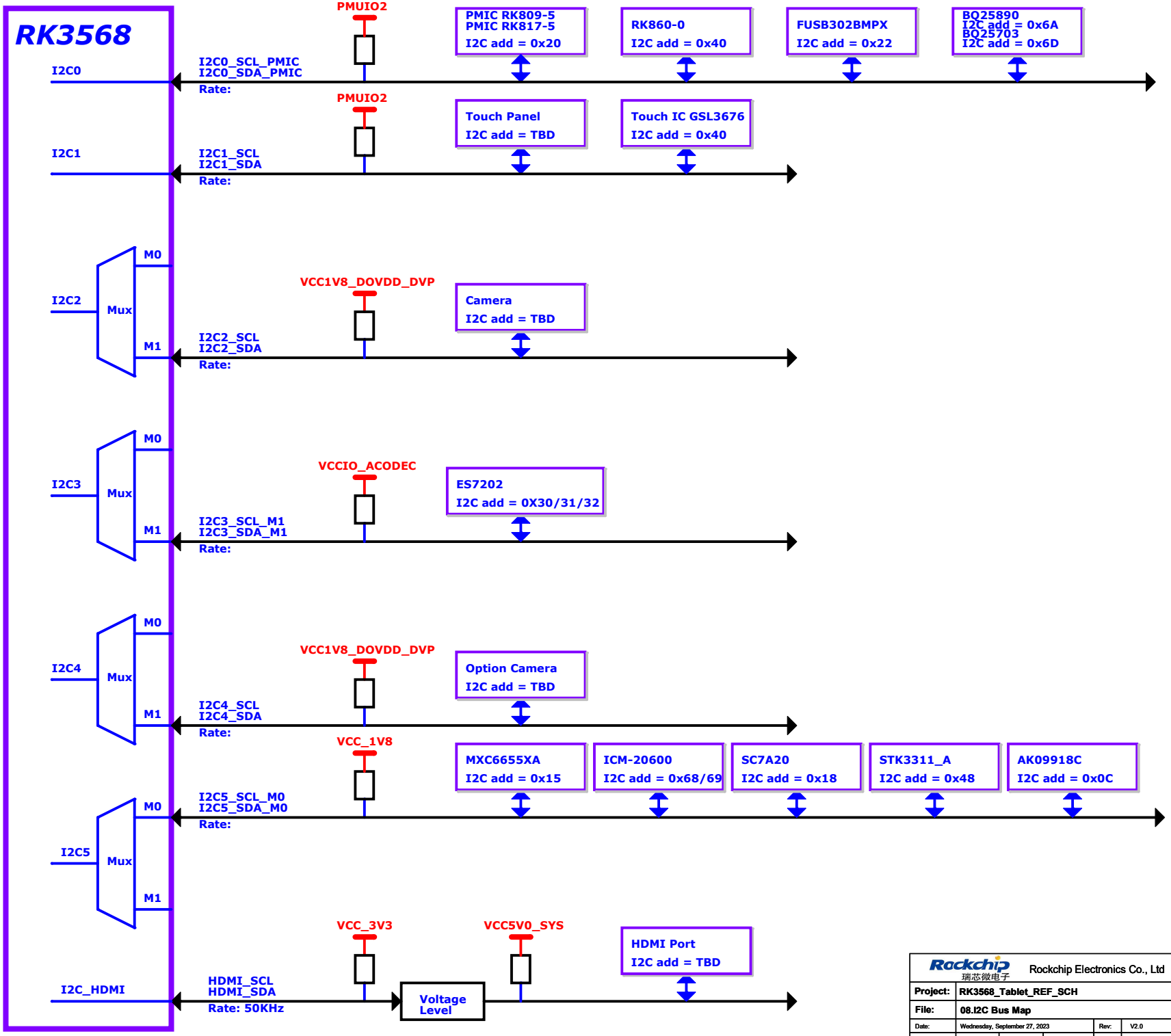

Rockchip Confidential

Rockchip 瑞芯微电子	Rockchip Electronics Co., Ltd				
Project:	RK3568_Tablet_REF_SCH				
File:	08.I2C Bus Map				
Date:	Wednesday, September 27, 2023			Rev:	V2.0
Designed by:	Zhangdz	Reviewed by:	Default	Sheet:	9 of 62

MULTI_PHY0/1/2 Path Map

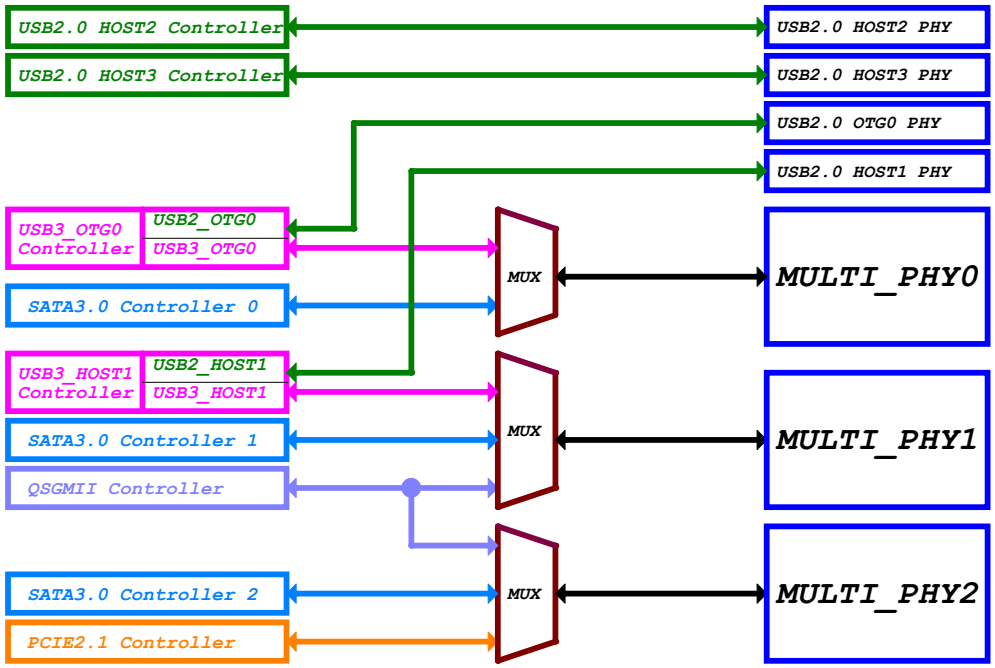

VOP Path Map

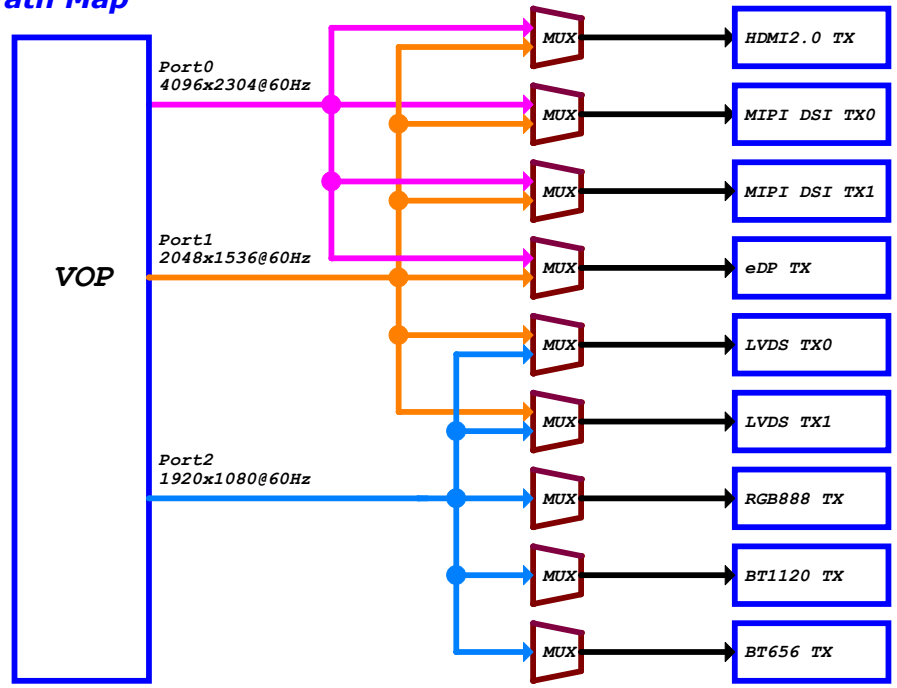

USB3.0 OTG0

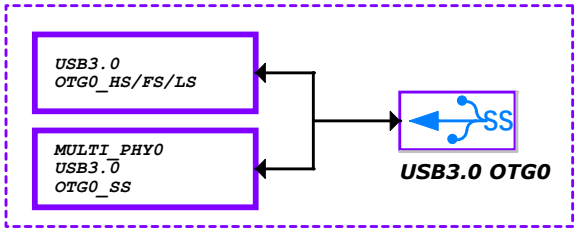

USB3.0 HOST1

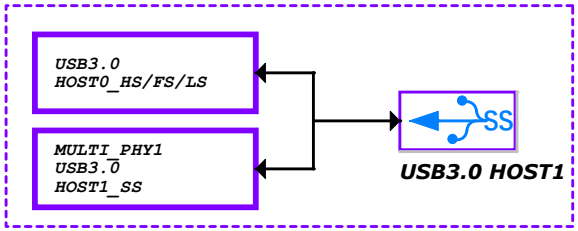

PCIe3.0 PHY

Option1	PCIe3.0 x2Lane	PCIE30_REFCLK (RC/EP:input)	PCIE30_TX0 PCIE30_RX0 PCIE30_TX1 PCIE30_RX1	PCIE30X2_CLKREQn PCIE30X2_WAKEn PCIE30X2_PERSTn PCIE30X2_BUTTONRSTn	RC or EP
Option2	PCIe3.0 x1Lane + PCIe3.0 x1Lane	PCIE30_REFCLK (RC:input)	PCIE30_TX0 PCIE30_RX0	PCIE30X2_CLKREQn PCIE30X2_WAKEn PCIE30X2_PERSTn PCIE30X2_BUTTONRSTn	Only RC
			PCIE30_TX1 PCIE30_RX1	PCIE30X1_CLKREQn PCIE30X1_WAKEn PCIE30X1_PERSTn PCIE30X1_BUTTONRSTn	Only RC

PCIe3.0 REFCLK-RC Mode

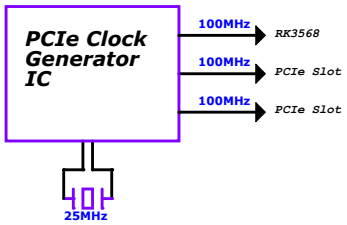

PCIe3.0 REFCLK-EP Mode

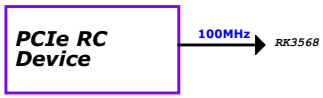

PCIe2.1 PHY

MULTI_PHY2	PCIe2.1 x1Lane	PCIE20_REFCLK (RC:output)	PCIE20_TX PCIE20_RX	PCIE20_CLKREQn PCIE20_WAKEn PCIE20_PERSTn PCIE20_BUTTONRSTn	Only RC

PCIe2.1 REFCLK-RC Mode

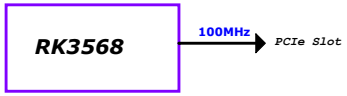

Rockchip Confidential

Rockchip 瑞芯微电子	Rockchip Electronics Co., Ltd		
Project:	RK3568_Tablet_REF_SCH		
File:	09.PCIE30/MULTI_PHY/VOP Fun Map		
Date:	Wednesday, September 27, 2023	Rev:	V2.0
Designed by: Zhangtz	Reviewed by: Default	Sheet:	10 of 62

RK3568_ABCDE (Power&Gnd)

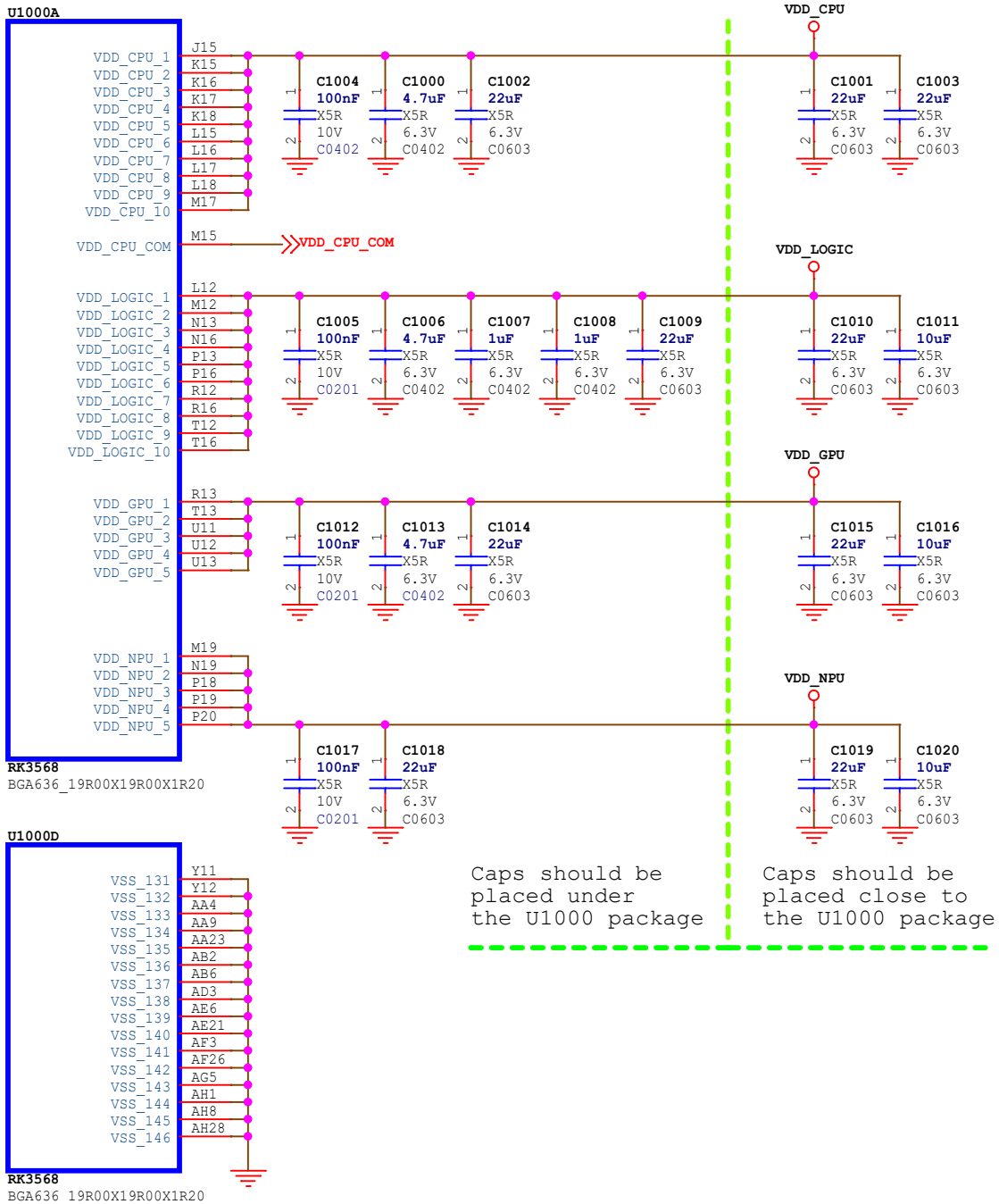

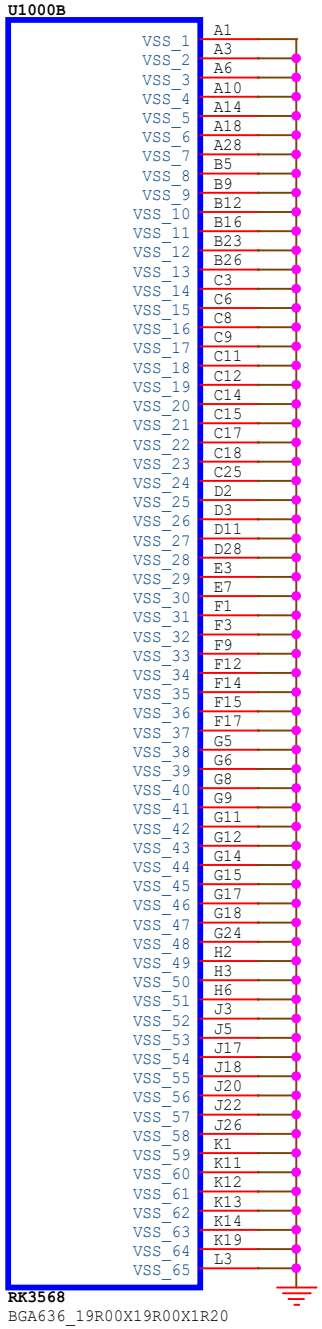

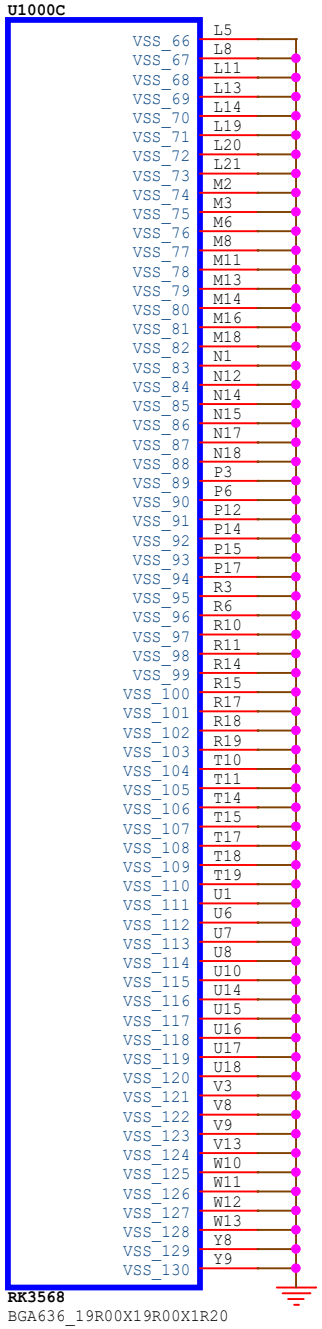

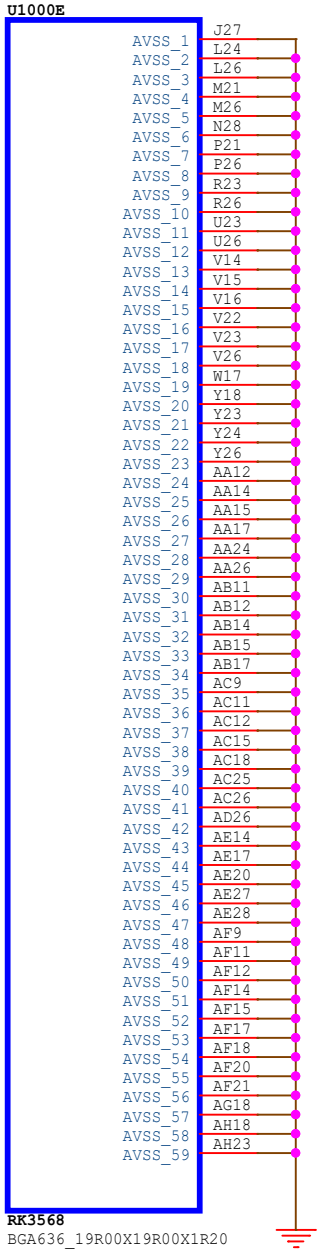

Rockchip Confidential

Rockchip 瑞芯微电子	Rockchip Electronics Co., Ltd				
Project:	RK3568_Tablet_REF_SCH				
File:	10.RK3568_Power/GND				
Date:	Wednesday, September 27, 2023			Rev:	V2.0
Designed by:	Zhangdz	Reviewed by:	Default	Sheet:	11 of 62

RK3568_F (DDR PHY)

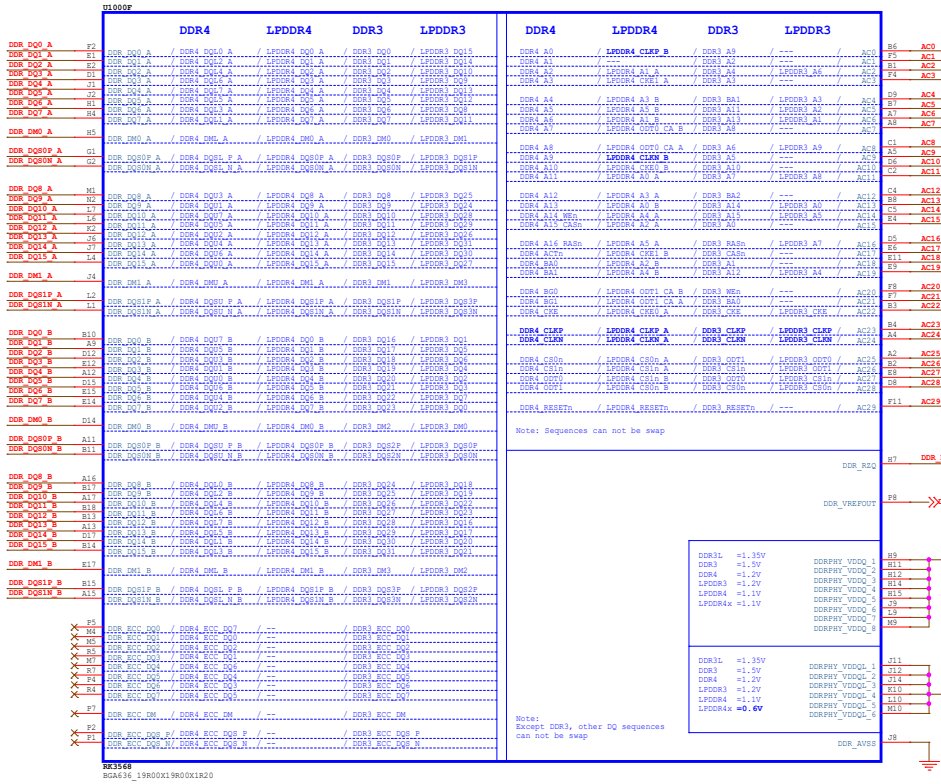

Default DDR4 AC

LPDDR4/4x AC

DDR3 AC

LPDDR3 AC

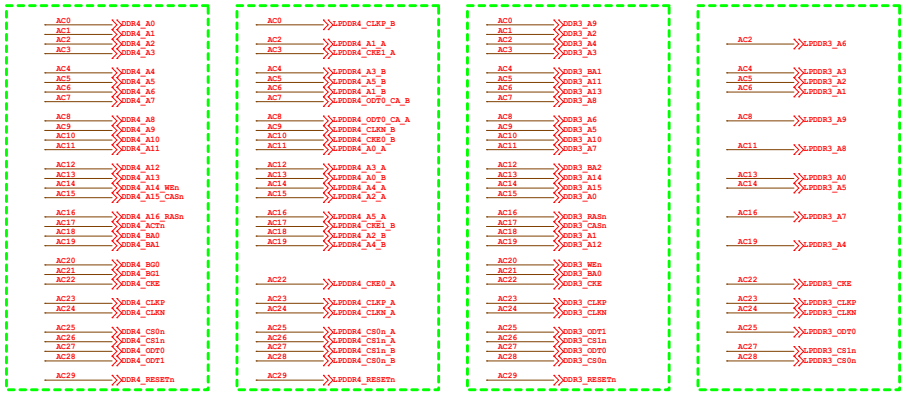

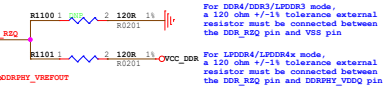

Default LPDDR4x

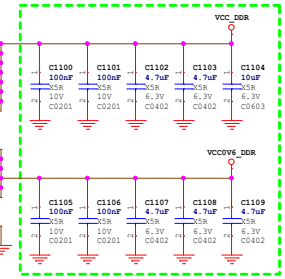

Caps should be placed under
the U1000 package

Note:

DDR3/DDR3L/DDR4/LPDDR4(only) mode:
DDRPHY_VDDQ and DDRPHY_VQQL Power supply can be combined

For example

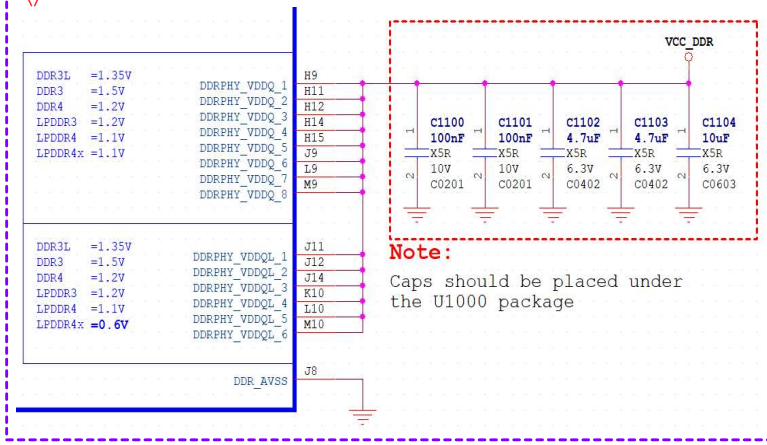

Note:

Caps should be placed under
the U1000 package

Default DDR4 DQ

LPDDR4/4x DQ

DDR3 DQ

LPDDR3 DQ

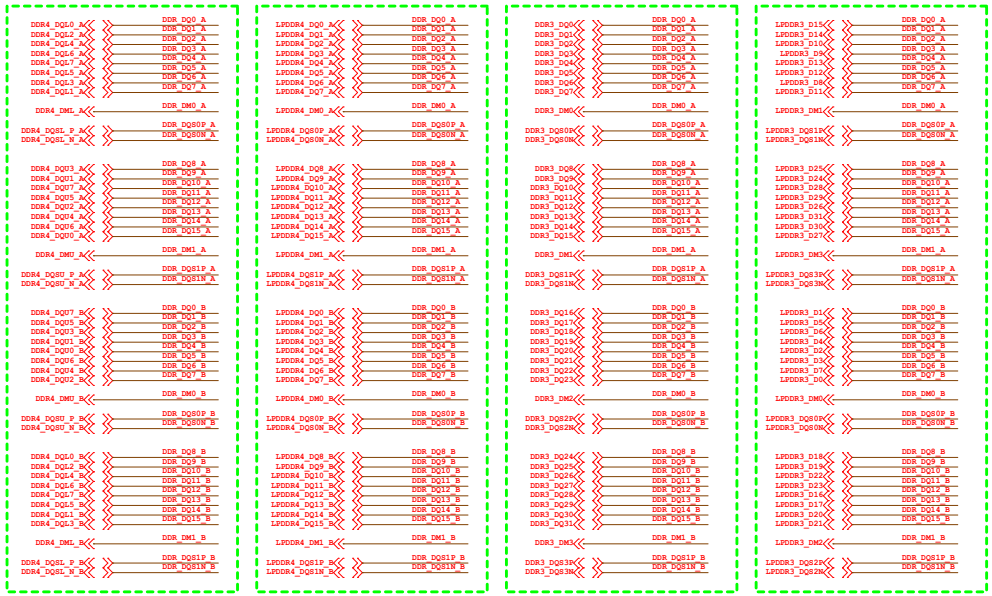

Rockchip 瑞芯微电子	Rockchip Electronics Co., Ltd
Project:	RK3568_Tablet_REF_SCH
File:	11.RK3568_DDR PHY
Date:	Wednesday, September 27, 2023
Rev:	V2.0
Designed by:	Zhangtz
Reviewed by:	Default
Sheet:	12 of 62

Rockchip Confidential

RK3568_G(OSC/PLL/PMUIO1/2)

Note:
Adjusted the load capacitance according to the crystal specification.

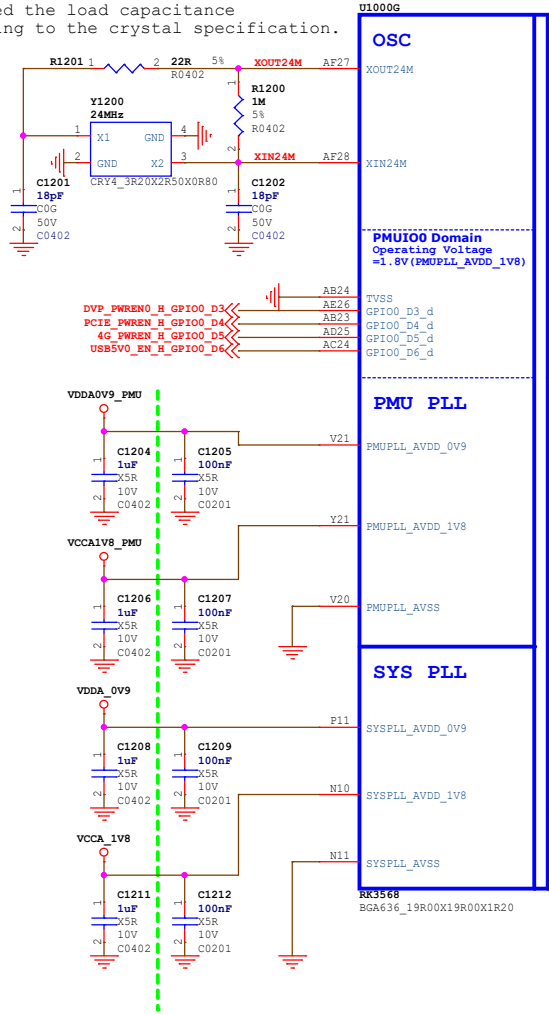

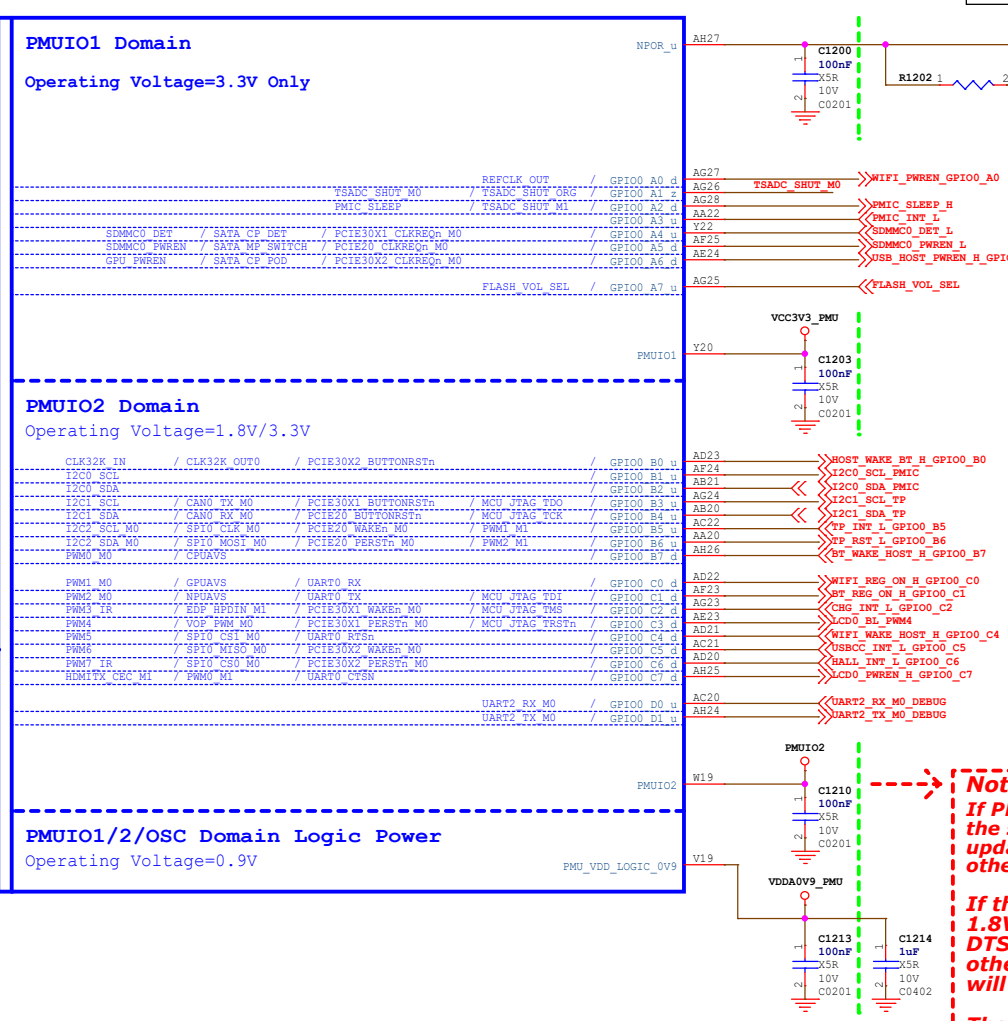

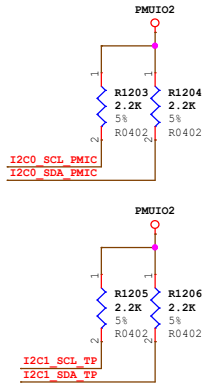

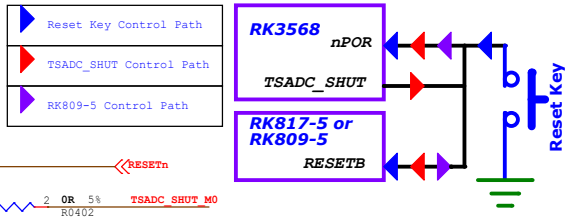

Note:
If PMUIO2 domain power voltage is adjusted, the software DTS configuration must be updated synchronously, otherwise the IO may be damaged!

If the PMUIO2 hardware has been modified to 1.8V power supply, and the corresponding DTS must be modified to 1.8V configuration, otherwise the IO function of PMUIO2 will be abnormally.

The PMUIO2 hardware has been modified to 3.3V power supply, if the software DTS configuration is still 1.8V configuration, the IO of PMUIO2 will be damaged!

If a board needs to be compatible with two voltage choices, recommended to enable BOM_ID

Note:
Caps of between dashed green lines and U1000 should be placed under the U1000 package.
Other caps should be placed close to the U1000 package

Rockchip Confidential

Rockchip 瑞芯微电子	Rockchip Electronics Co., Ltd				
Project:	RK3568_Tablet_REF_SCH				
File:	12.RK3568_OSC/PLL/PMUIO				
Date:	Wednesday, September 27, 2023			Rev:	V2.0
Designed by:	Zhangdz	Reviewed by:	Default	Sheet:	13 of 62

RK3568_I(VCCIO2 Domain)

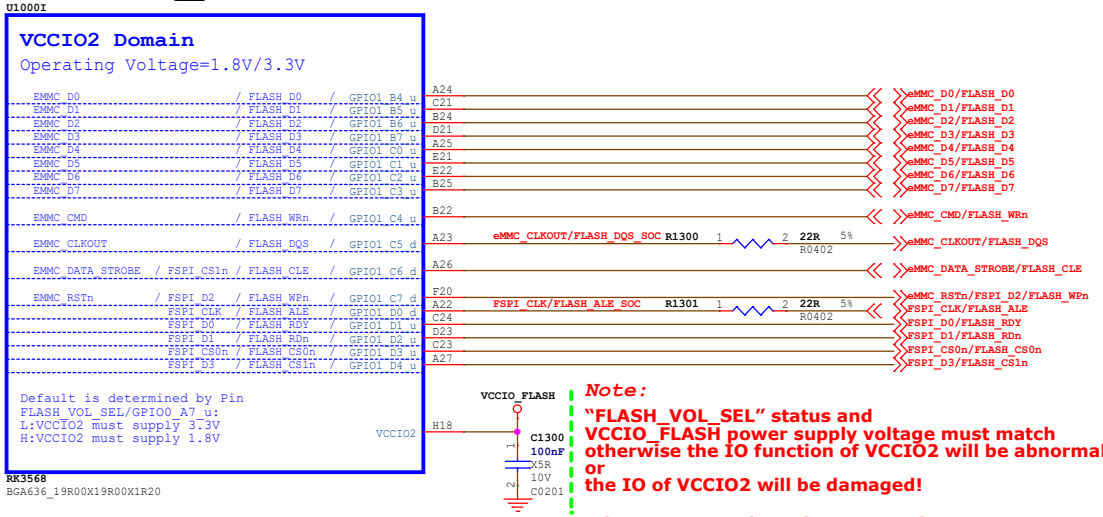

Note:

"FLASH_VOL_SEL" status and VCCIO_FLASH power supply voltage must match otherwise the IO function of VCCIO2 will be abnormally or the IO of VCCIO2 will be damaged!

When VCCIO2 voltage is connected to 1.8V, FLASH_VOL_SEL must be high
When VCCIO2 voltage is connected to 3.3V, FLASH_VOL_SEL must be low
If VCCIO2 power supply voltage and FLASH_VOL_SEL fails to meet the above relationship, its function will be abnormally(for example, it cannot be started normally) or IO will be damaged.

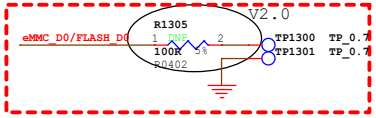

Note:

For eMMC or Nand Flash:
If eMMC_D0/FLASH_D0=0V at after power on and reset, then system will enter into Maskrom mode.

Layout note:

Test point must be placed on the line, and no branch can be added

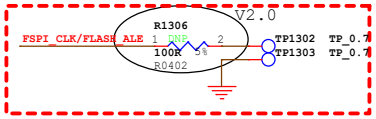

Note:

For SPI Flash:
If FSPI_CLK=0V at after power on and reset, then system will enter into Maskrom mode.

Note:

Reserve TestPoint for put the system into Maskrom mode to update the firmware
When writing mismatched firmware or other conditions result in boot failure, use this test point

Except in this case, please use Recovery Key
Put the system into loader mode to update the firmware

RK3568_J(VCCIO3 Domain)

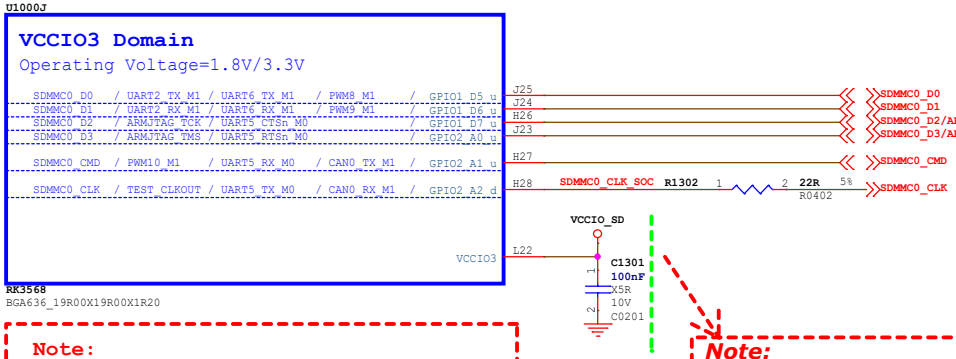

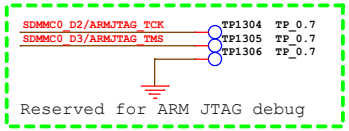

Note:

Caps of between dashed green lines and U1000 should be placed under the U1000 package

Note:

If VCCIO3 domain power voltage is adjusted, the software DTS configuration must be updated synchronously, otherwise the IO may be damaged!

If the VCCIO3 hardware has been modified to 1.8V power supply, and the corresponding DTS must be modified to 1.8V configuration, otherwise the IO function of VCCIO3 will be abnormally.

The VCCIO3 hardware has been modified to 3.3V power supply, if the software DTS configuration is still 1.8V configuration, the IO of VCCIO3 will be damaged!

If a board needs to be compatible with two voltage choices, recommended to enable BOM_ID

Rockchip Confidential

RK3568_U(USB3.0/SATA/QSGMII/PCIe2.0 x1)

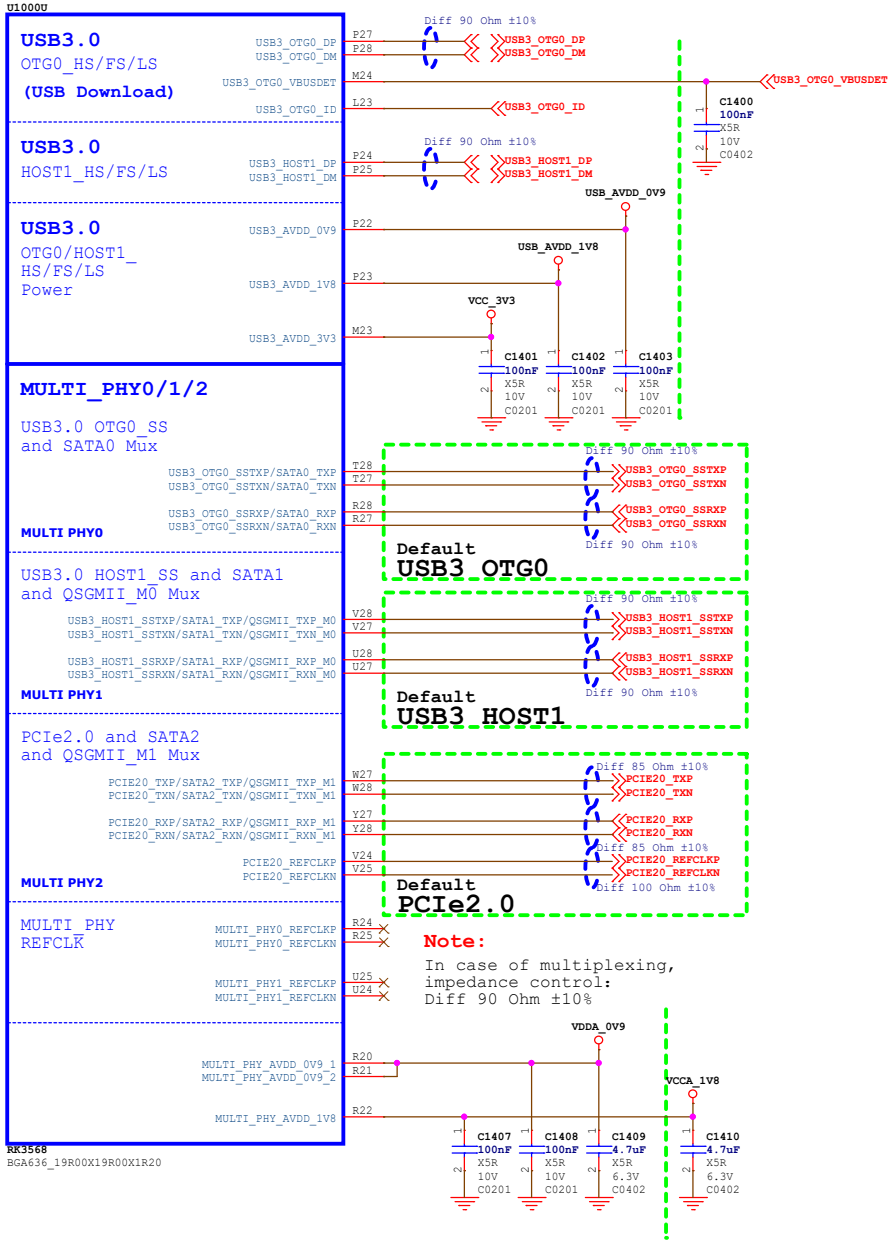

Note:

Caps of between dashed green lines and U1000
should be placed under the U1000 package.
Other caps should be placed close to the U1000 package

Rockchip Confidential

RK3568_V(USB2.0 HOST)

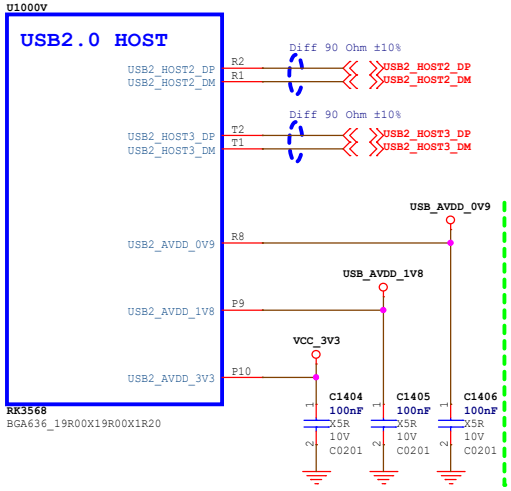

RK3568_W(PCIe3.0 x2)

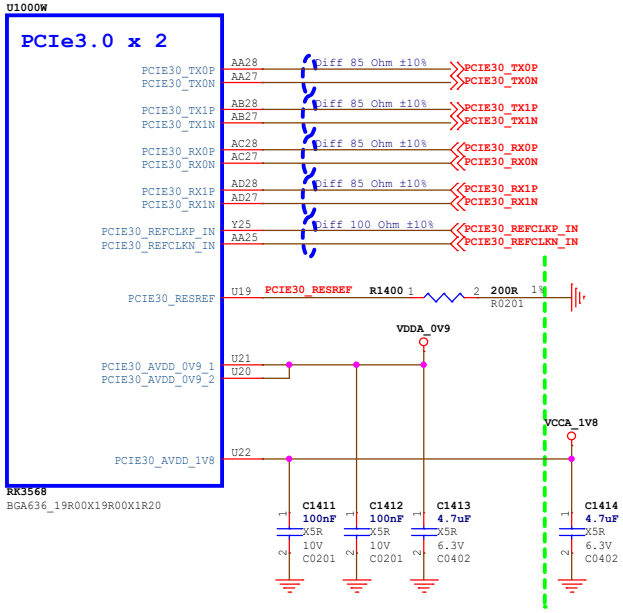

Rockchip 瑞芯微电子	Rockchip Electronics Co., Ltd		
Project:	RK3568_Tablet_REF_SCH		
File:	14.RK3568_USB/PCIe/SATA PHY		
Date:	Wednesday, September 27, 2023	Rev:	V2.0
Designed by: Zhangdz	Reviewed by: Default	Sheet:	15 of 62

RK3568_K(VCCIO4 Domain)

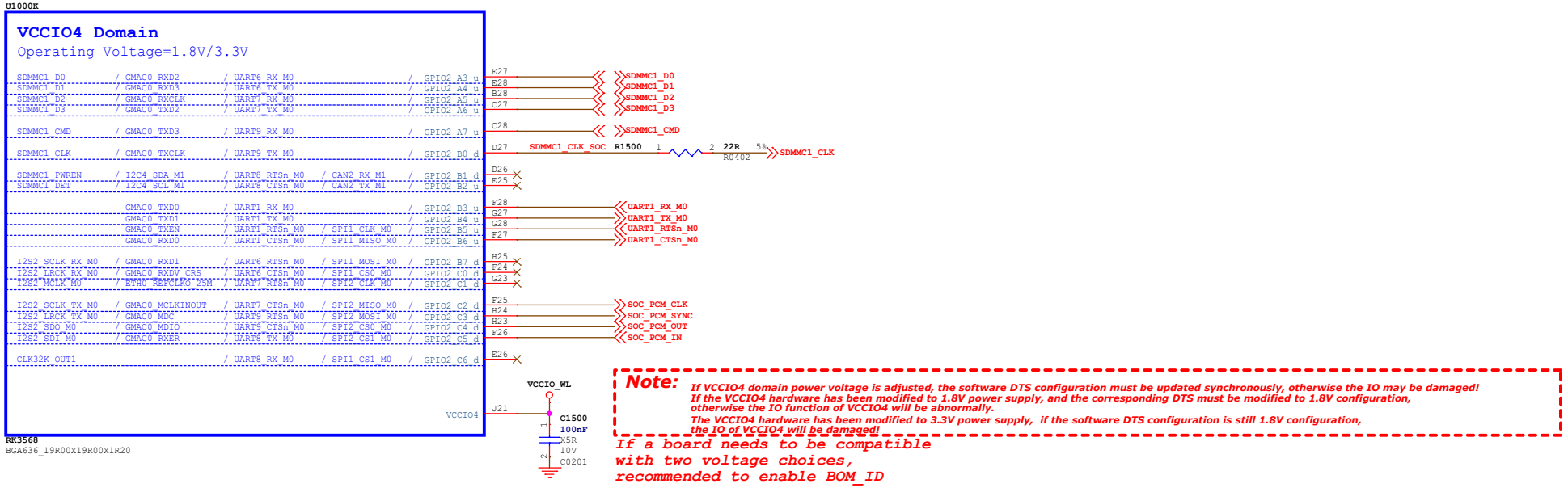

Note: *If VCCIO4 domain power voltage is adjusted, the software DTS configuration must be updated synchronously, otherwise the IO may be damaged!*
If the VCCIO4 hardware has been modified to 1.8V power supply, and the corresponding DTS must be modified to 1.8V configuration, otherwise the IO function of VCCIO4 will be abnormally.
The VCCIO4 hardware has been modified to 3.3V power supply, if the software DTS configuration is still 1.8V configuration, the IO of VCCIO4 will be damaged!

If a board needs to be compatible with two voltage choices, recommended to enable BOM_ID

RK3568_N(VCCIO7 Domain)

Note: *When use HDMI, HDMITX_SCL/SDA cannot be shared with other devices*

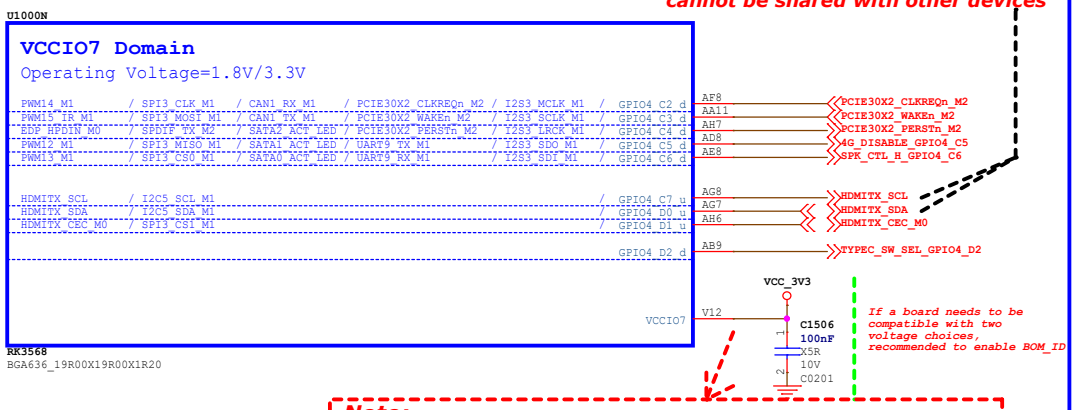

If a board needs to be compatible with two voltage choices, recommended to enable BOM_ID

Note: *If VCCIO7 domain power voltage is adjusted, the software DTS configuration must be updated synchronously, otherwise the IO may be damaged!*

If the VCCIO7 hardware has been modified to 1.8V power supply, and the corresponding DTS must be modified to 1.8V configuration, otherwise the IO function of VCCIO7 will be abnormally.

The VCCIO7 hardware has been modified to 3.3V power supply, if the software DTS configuration is still 1.8V configuration, the IO of VCCIO7 will be damaged!

RK3568_O(SARADC/OTP)

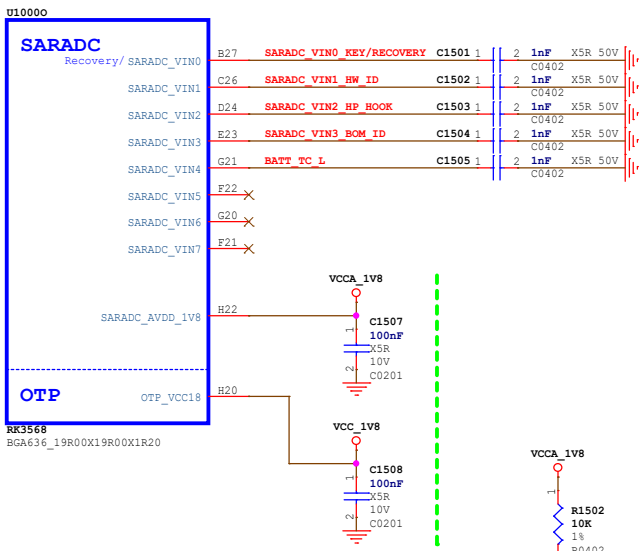

Note: Must be mounted

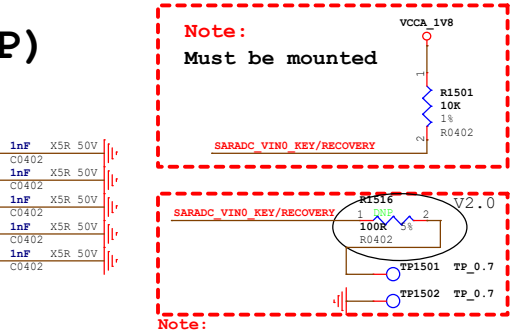

Note:

If there is no Key requirement, two test points must be reserved to facilitate firmware update

It is suggested to reserve a Key to facilitate the development debug

If SARADC_VIN0=0V at after power on and reset, then system will enter into loader mode.

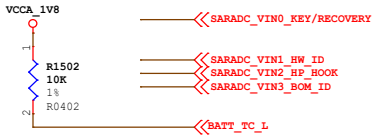

Note:

Caps of between dashed green lines and U1000 should be placed under the U1000 package

Rockchip 瑞芯微电子	Rockchip Electronics Co., Ltd				
Project:	RK3568_Tablet_REF_SCH				
File:	15.RK3568_SARADC/GPIO				
Date:	Wednesday, September 27, 2023			Rev:	V2.0
Designed by:	Zhangdz	Reviewed by:	Default	Sheet:	16 of 62

Rockchip Confidential

RK3568_P(MIPI_CSI_RX)

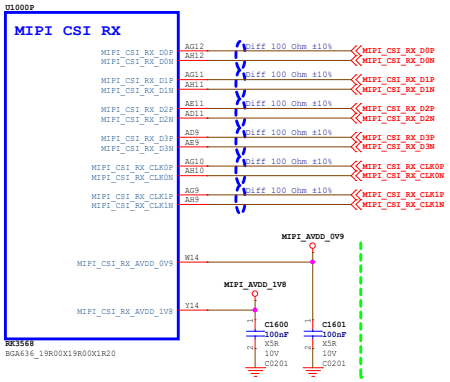

Option1	Sensor1 x4Lane	MIPI_CSI_RX_D0-3 MIPI_CSI_RX_CLK0
Option2	Sensor1 x2Lane + Sensor2 x2Lane	MIPI_CSI_RX_D0-1 MIPI_CSI_RX_CLK0
		MIPI_CSI_RX_D2-3 MIPI_CSI_RX_CLK1

RK3568_M(VCCIO6 Domain)

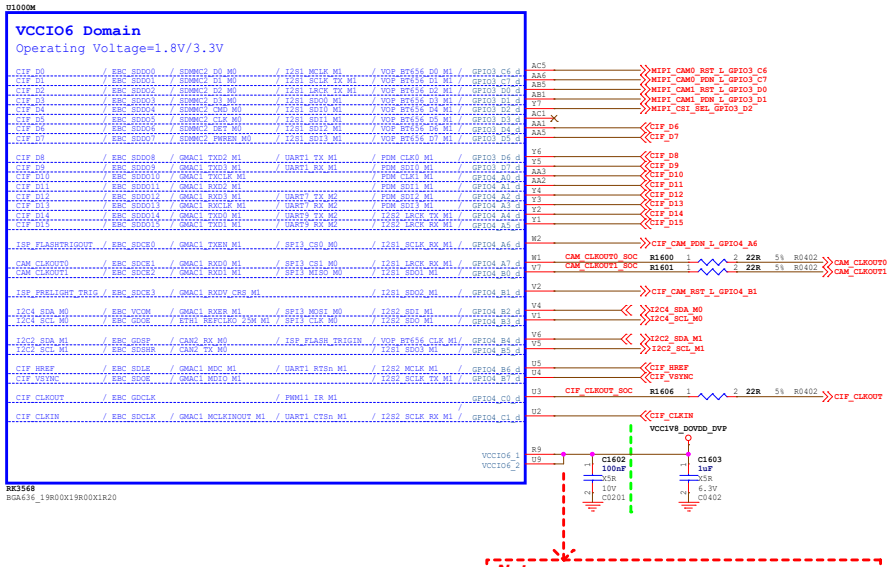

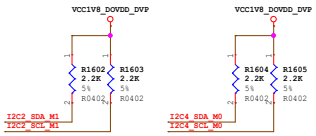

Mode	16bit	12bit	10bit	8bit
CIF_D0	D0	--	--	--
CIF_D1	D1	--	--	--
CIF_D2	D2	--	--	--
CIF_D3	D3	--	--	--
CIF_D4	D4	D0	--	--
CIF_D5	D5	D1	--	--
CIF_D6	D6	D2	D0	--
CIF_D7	D7	D3	D1	--
CIF_D8	D8	D4	D2	D0
CIF_D9	D9	D5	D3	D1
CIF_D10	D10	D6	D4	D2
CIF_D11	D11	D7	D5	D3
CIF_D12	D12	D8	D6	D4
CIF_D13	D13	D9	D7	D5
CIF_D14	D14	D10	D8	D6
CIF_D15	D15	D11	D9	D7

BT1120 16bit Mode:
Default: D0-D7 <--> Y0-Y7 , D8-D15 <--> C0-C7
Swap ON: D0-D7 <--> C0-C7 , D8-D15 <--> Y0-Y7

Note:
Caps of between dashed green lines and U1000
should be placed under the U1000 package.
Other caps should be placed close to the U1000 package

Note:
If VCCIO6 domain power voltage is adjusted, the software DTS configuration must be updated synchronously, otherwise the IO may be damaged!

If the VCCIO6 hardware has been modified to 1.8V power supply, and the corresponding DTS must be modified to 1.8V configuration, otherwise the IO function of VCCIO6 will be abnormally.

The VCCIO6 hardware has been modified to 3.3V power supply, if the software DTS configuration is still 1.8V configuration, the IO of VCCIO6 will be damaged!

Note:
According to the actual choice of mounted
Cannot be mounted at the same time

Default:1.8V
Select the voltage according to the application

If the IO domain is to be used as FEPHY,
since some FEPHY only support 3.3V IO,
it is recommended to reallocate GPIO
to reduce the cost of level conversion

If a board needs to be compatible with two voltage choices, recommended to enable BOM_ID

GMAC	Direction	GEPHY	GMAC	Direction	FEPHY
GMACx_TXD0	------>	PHYx_TXD0	GMACx_TXD0	------>	PHYx_TXD0
GMACx_TXD1	------>	PHYx_TXD1	GMACx_TXD1	------>	PHYx_TXD1
GMACx_TXD2	------>	PHYx_TXD2			
GMACx_TXD3	------>	PHYx_TXD3			
GMACx_TXEN	------>	PHYx_TXEN	GMACx_TXEN	------>	PHYx_TXEN
GMACx_TXCLK	------>	PHYx_TXCLK			
GMACx_RXD0	<------	PHYx_RXD0	GMACx_RXD0	<------	PHYx_RXD0
GMACx_RXD1	<------	PHYx_RXD1	GMACx_RXD1	<------	PHYx_RXD1
GMACx_RXD2	<------	PHYx_RXD2			
GMACx_RXD3	<------	PHYx_RXD3			
GMACx_RXDV	<------	PHYx_RXDV	GMACx_RXDV	<------	PHYx_CRS_DV
GMACx_RXCLK	<------	PHYx_RXCLK			
GMACx_RXER			GMACx_RXER	<------	PHYx_RXER
GMACx_MDC	------>	PHYx_MDC	GMACx_MDC	------>	PHYx_MDC
GMACx_MDIO	<------>	PHYx_MDIO	GMACx_MDIO	<------>	PHYx_MDIO
ETHx_REFCLKO_25M	------>	PHYx OSC	ETHx_REFCLKO_25M	------>	PHYx OSC
GMACx_MCLKINOUT	<------	PHYx_CLKOUT125(Option)	GMACx_MCLKINOUT	<------>	PHYx_TXC
GPIO	------>	PHYx_RSTn	GPIO	------>	PHYx_RSTn
GPIO	<------	PHYx_INT/PMEB	GPIO	<------	PHYx_INT/PMEB

Note:
Camera MCLK can select the following clock:
1:CAM_CLKOUT0
2:CAM_CLKOUT1
3:CIF_CLKOUT
4:REFCLK_OUT(24MHz)

Attention to the voltage matching

Rockchip Confidential

Rockchip 瑞芯微电子	Rockchip Electronics Co., Ltd		
Project:	RK3568_Tablet_REF_SCH		
File:	16.RK3568_VI Interface		
Date:	Wednesday, September 27, 2023	Rev:	V2.0
Designed by: Zhangtz	Reviewed by: Default	Sheet:	17 of 62

RK3568_R(MIPI_DSI_TX0/LVDS_TX0)

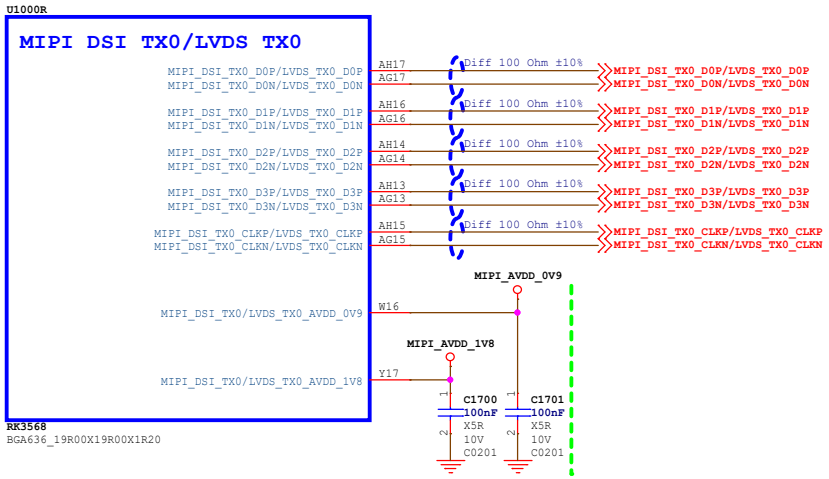

RK3568_S(MIPI_DSI_TX1/LVDS_TX1)

Note:
Add LVDS_TX1 function

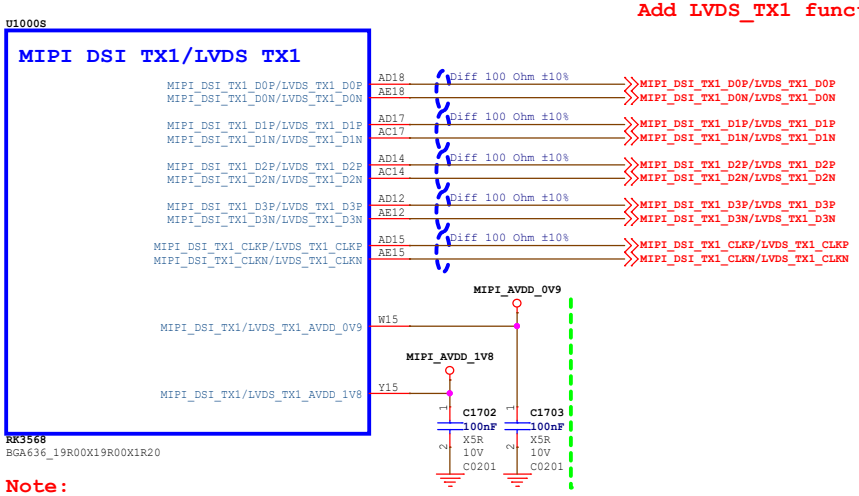

Note:

MIPI_DSI_TX0 + MIPI_DSI_TX1 support dual MIPI DSI TX interface,
Left and Right support redistribution.

LVDS_TX0 + LVDS_TX1 support dual LVDS TX interface,
Left and Right support redistribution

RK3568_T(eDP TX)

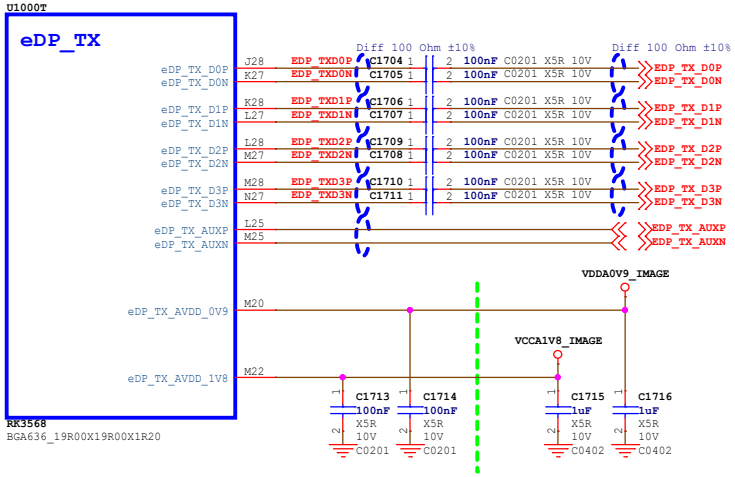

Note:
Caps of between dashed green lines and U1000
should be placed under the U1000 package.
Other caps should be placed close to the U1000 package

RK3568_Q(HDMI2.0 TX)

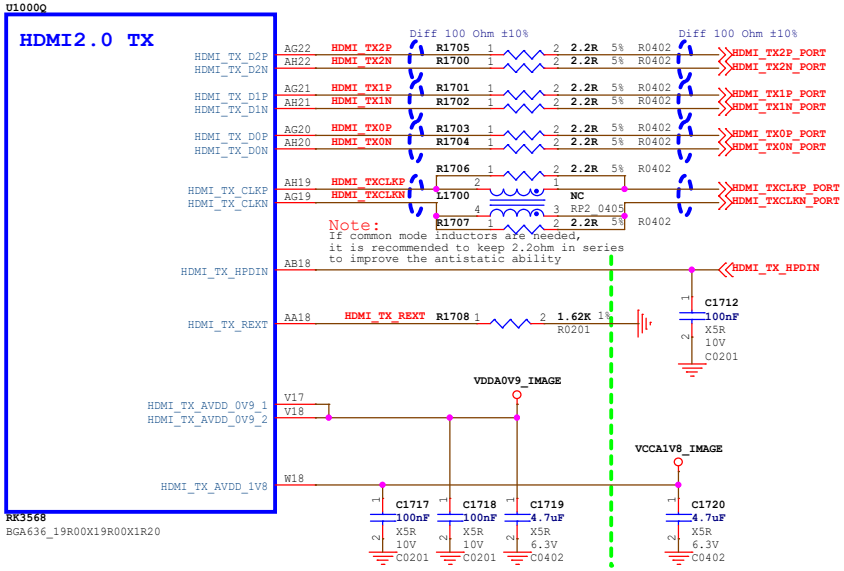

Rockchip 瑞芯微电子	Rockchip Electronics Co., Ltd				
Project:	RK3568_Tablet_REF_SCH				
File:	17.RK3568_VO Interface_1				
Date:	Wednesday, September 27, 2023			Rev:	V2.0
Designed by:	Zhangdz	Reviewed by:	Default	Sheet:	18 of 62

Rockchip Confidential

RK3568_L(VCCIO5 Domain)

U1000L

VCCIO5 Domain

Operating Voltage=1.8V/3.3V

LCDC_D0	VOP_BT656_D0_M0	SPI0_MISO_M1	PCIE20_CLKREQn_M1	I2S1_MCLK_M2	GPIO2_D0_d	AG6
LCDC_D1	VOP_BT656_D1_M0	SPI0_MOSI_M1	PCIE20_WAKEn_M1	I2S1_SCLK_TX_M2	GPIO2_D1_d	AD7
LCDC_D2	VOP_BT656_D2_M0	SPI0_CS0_M1	PCIE30X1_CLKREQn_M1	I2S1_LRCK_TX_M2	GPIO2_D2_d	AC8
LCDC_D3	VOP_BT656_D3_M0	SPI0_CLK_M1	PCIE30X1_WAKEn_M1	I2S1_SDI0_M2	GPIO2_D3_d	AC7
LCDC_D4	VOP_BT656_D4_M0	SPI2_CS1_M1	PCIE30X2_CLKREQn_M1	I2S1_SDI1_M2	GPIO2_D4_d	AF5
LCDC_D5	VOP_BT656_D5_M0	SPI2_CS0_M1	PCIE30X2_WAKEn_M1	I2S1_SDI2_M2	GPIO2_D5_d	AF6
LCDC_D6	VOP_BT656_D6_M0	SPI2_MOSI_M1	PCIE30X2_PERSTn_M1	I2S1_SDI3_M2	GPIO2_D6_d	AD6
LCDC_D7	VOP_BT656_D7_M0	SPI2_MISO_M1	UART8_TX_M1	I2S1_SDO0_M2	GPIO2_D7_d	AH5
LCDC_CLK	VOP_BT656_CLK_M0	SPI2_CLK_M1	UART8_RX_M1	I2S1_SDO1_M2	GPIO3_A0_d	AH4
LCDC_D8	VOP_BT1120_D0	SPI1_CS0_M1	PCIE30X1_PERSTn_M1	SDMMC2_D0_M1	GPIO3_A1_d	AB8
LCDC_D9	VOP_BT1120_D1	GMAC1_TXD2_M0	I2S3_MCLK_M0	SDMMC2_D1_M1	GPIO3_A2_d	AE5
LCDC_D10	VOP_BT1120_D2	GMAC1_TXD3_M0	I2S3_SCLK_M0	SDMMC2_D2_M1	GPIO3_A3_d	AG4
LCDC_D11	VOP_BT1120_D3	GMAC1_RXD2_M0	I2S3_LRCK_M0	SDMMC2_D3_M1	GPIO3_A4_d	AF4
LCDC_D12	VOP_BT1120_D4	GMAC1_RXD3_M0	I2S3_SDO_M0	SDMMC2_CMD_M1	GPIO3_A5_d	AH3
LCDC_D13	VOP_BT1120_CLK	GMAC1_TXCLK_M0	I2S3_SDI_M0	SDMMC2_CLK_M1	GPIO3_A6_d	AG3
LCDC_D14	VOP_BT1120_D5	GMAC1_RXCLK_M0		SDMMC2_DET_M1	GPIO3_A7_d	AH2
LCDC_D15	VOP_BT1120_D6	ETH1_REFCLKO_25M_M0		SDMMC2_PWREN_M1	GPIO3_B0_d	AG2
LCDC_D16	VOP_BT1120_D7	GMAC1_RXD0_M0	UART4_RX_M1	PWM8_M0	GPIO3_B1_d	AG1
LCDC_D17	VOP_BT1120_D8	GMAC1_RXD1_M0	UART4_TX_M1	PWM9_M0	GPIO3_B2_d	AF2
LCDC_D18	VOP_BT1120_D9	GMAC1_RXDV_CRS_M0	I2C5_SCL_M0	PDM_SDI0_M2	GPIO3_B3_d	AF1
LCDC_D19	VOP_BT1120_D10	GMAC1_RXER_M0	I2C5_SDA_M0	PDM_SDI1_M2	GPIO3_B4_d	AE1
LCDC_D20	VOP_BT1120_D11	GMAC1_TXD0_M0	I2C3_SCL_M1	PWM10_M0	GPIO3_B5_d	AE2
LCDC_D21	VOP_BT1120_D12	GMAC1_TXD1_M0	I2C3_SDA_M1	PWM11_IR_M0	GPIO3_B6_d	AE3
LCDC_D22	PWM12_M0	GMAC1_TXEN_M0	UART3_TX_M1	PDM_SDI2_M2	GPIO3_B7_d	AD4
LCDC_D23	PWM13_M0	GMAC1_MCLKINOUT_M0	UART3_RX_M1	PDM_SDI3_M2	GPIO3_C0_d	AD2
LCDC_HSYNC	VOP_BT1120_D13	SPI1_MOSI_M1	PCIE20_PERSTn_M1	I2S1_SDO2_M2	GPIO3_C1_d	AD1
LCDC_VSYNC	VOP_BT1120_D14	SPI1_MISO_M1	UART5_TX_M1	I2S1_SDO3_M2	GPIO3_C2_d	AA7
LCDC_DEN	VOP_BT1120_D15	SPI1_CLK_M1	UART5_RX_M1	I2S1_SCLK_RX_M2	GPIO3_C3_d	AC4
PWM14_M0	VOP_PWM_M1	GMAC1_MDC_M0	UART7_TX_M1	PDM_CLK1_M2	GPIO3_C4_d	AC3
PWM15_IR_M0	SPDIF_TX_M1	GMAC1_MDIO_M0	UART7_RX_M1	I2S1_LRCK_RX_M2	GPIO3_C5_d	AC2

VCCIO5_1 V10
VCCIO5_2 V11

RK3568
BGA636_19R00X19R00X1R20

PCIE20_CLKREQn_M1
PCIE20_WAKEn_M1
GSENSOR_INT_L_GPIO2_D2
ALPS_INT_L_GPIO2_D3
GYRO_INT_L_GPIO2_D4
LCD_EN_H_GPIO2_D5
LCD_RST_L_GPIO2_D6

I2C5_SCL_M0
I2C5_SDA_M0

PCIE20_PERSTn_M1
HP_DET_L_GPIO3_C2
BQ_OTG_EN_H_GPIO3_C3

VCC_1V8
R1800 2.2K 5% R0402
R1801 2.2K 5% R0402
I2C5_SCL_M0
I2C5_SDA_M0

VCC_1V8
C1800 100nF X5R 10V C0201

If a board needs to be compatible with two voltage choices, recommended to enable BOM_ID

Note:

If VCCIO5 domain power voltage is adjusted, the software DTS configuration must be updated synchronously, otherwise the IO may be damaged!

If the VCCIO5 hardware has been modified to 1.8V power supply, and the corresponding DTS must be modified to 1.8V configuration, otherwise the IO function of VCCIO5 will be abnormally.

The VCCIO5 hardware has been modified to 3.3V power supply, if the software DTS configuration is still 1.8V configuration, the IO of VCCIO5 will be damaged!

Note:

Caps of between dashed green lines and U1000 should be placed under the U1000 package

Rockchip Confidential

Rockchip 瑞芯微电子	Rockchip Electronics Co., Ltd				
Project:	RK3568_Tablet_REF_SCH				
File:	18.RK3568_VO Interface_2				
Date:	Wednesday, September 27, 2023			Rev:	V2.0
Designed by:	Zhangdz	Reviewed by:	Default	Sheet:	19 of 62

RK3568_H(VCCIO1 Domain)

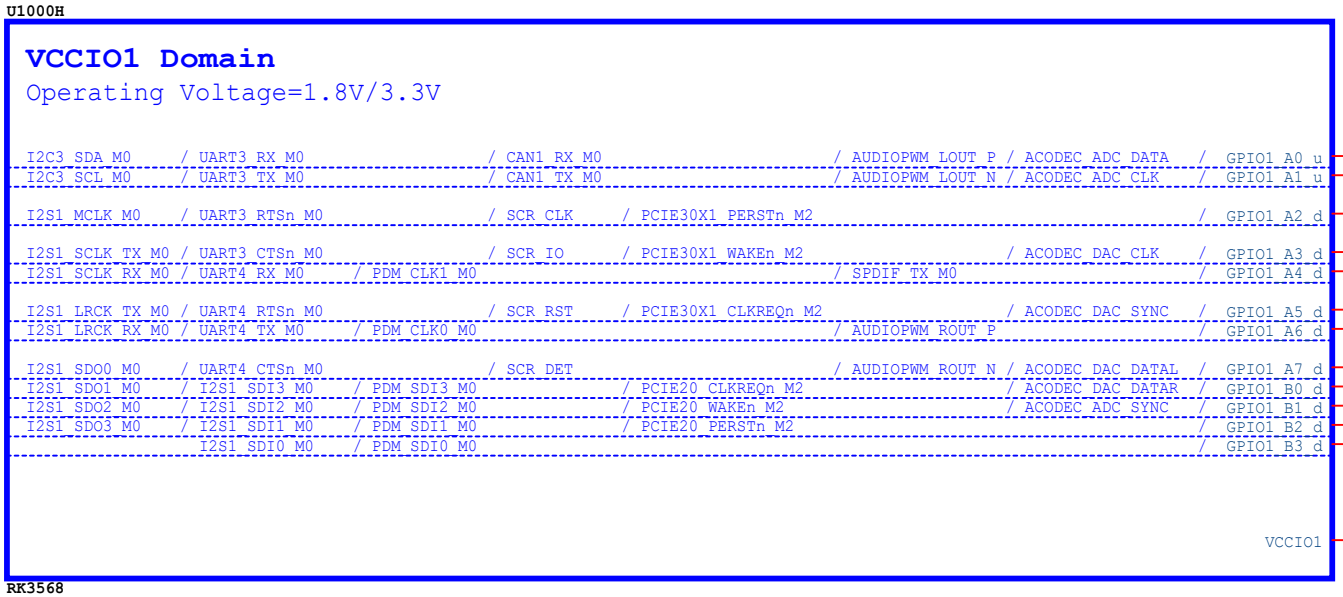

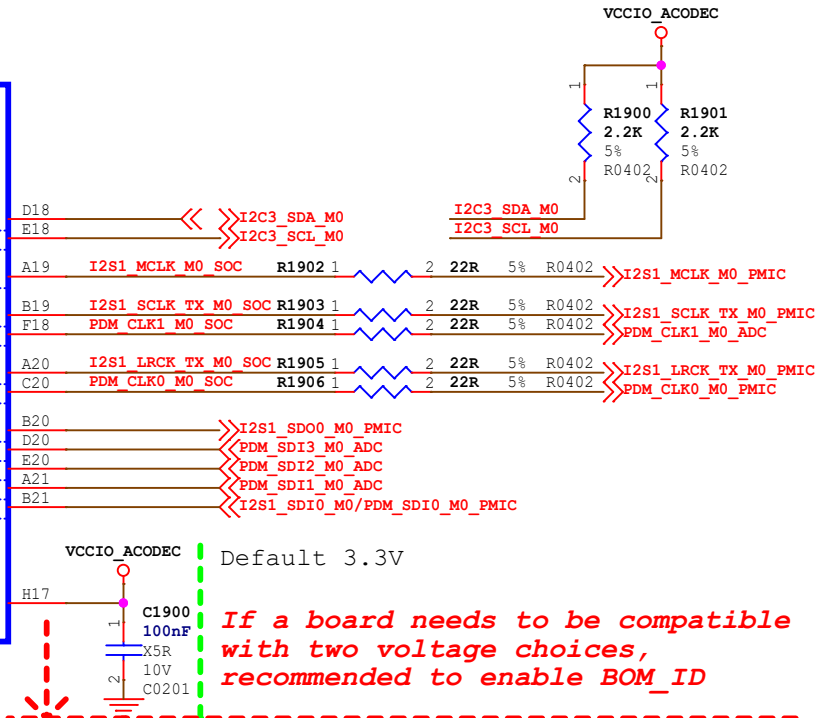

Note:

If VCCIO1 domain power voltage is adjusted, the software DTS configuration must be updated synchronously, otherwise the IO may be damaged!

If the VCCIO1 hardware has been modified to 1.8V power supply, and the corresponding DTS must be modified to 1.8V configuration, otherwise the IO function of VCCIO1 will be abnormally.

The VCCIO1 hardware has been modified to 3.3V power supply, if the software DTS configuration is still 1.8V configuration, the IO of VCCIO1 will be damaged!

Note:

Caps of between dashed green lines and U1000 should be placed under the U1000 package

Rockchip Confidential

Rockchip 瑞芯微电子	Rockchip Electronics Co., Ltd				
Project:	RK3568_Tablet_REF_SCH				
File:	19.RK3568_Audio Interface				
Date:	Wednesday, September 27, 2023			Rev:	V2.0
Designed by:	Zhangdz	Reviewed by:	Default	Sheet:	20 of 62

Default:
USB Type-C Port

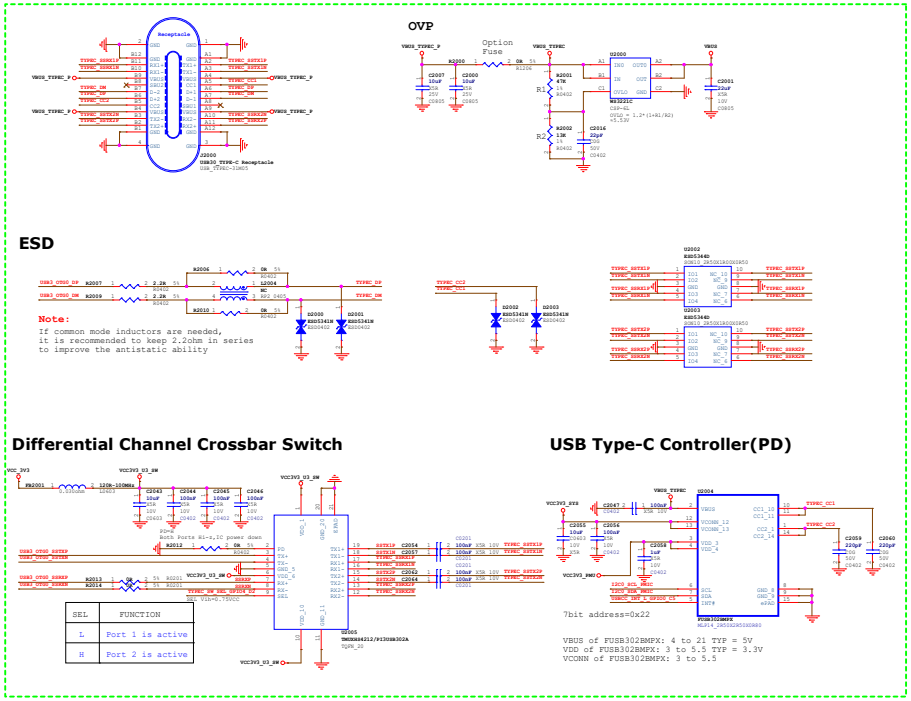

Option:
MicroUSB Port

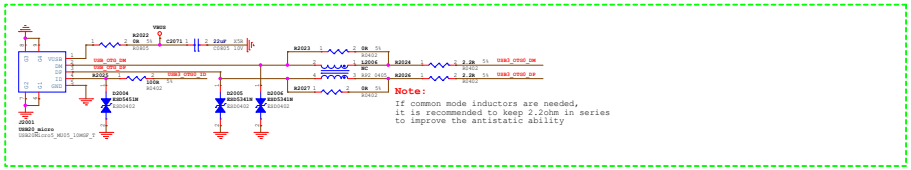

PMIC RK817 DCDC

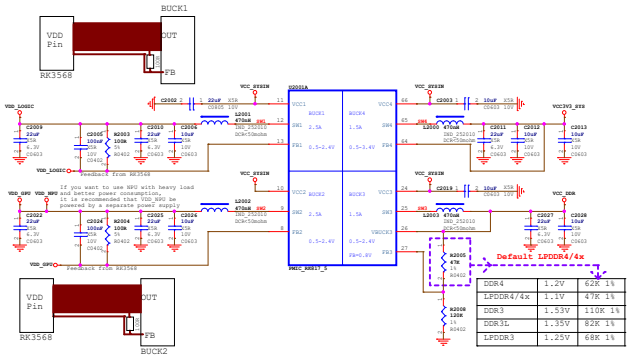

DDR4	1.2V	62K 1%
LPDDR4/4x	1.1V	47K 1%
DDR3	1.53V	110K 1%
DDR3L	1.35V	82K 1%
LPDDR3	1.25V	68K 1%

PMIC RK817 LDO

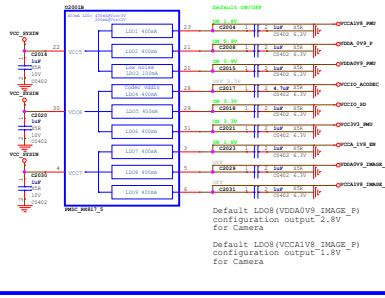

PMIC RK817 Managerment

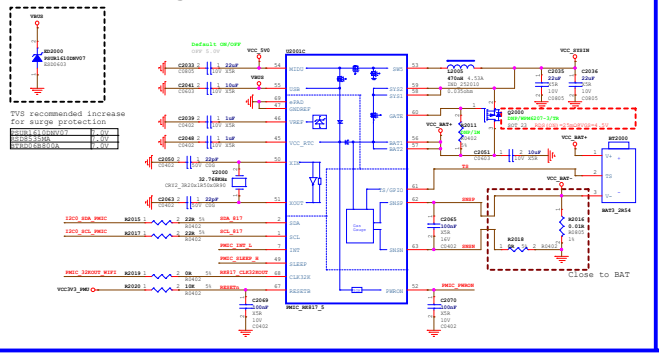

PMIC RK817 CODEC

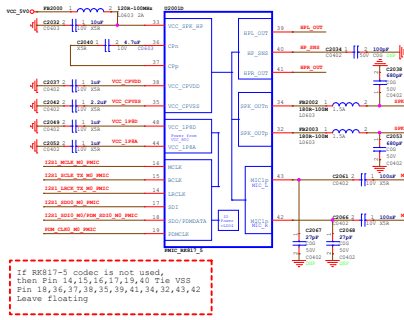

VDDA_0V9, VDDA0V9_IMAGE ------select

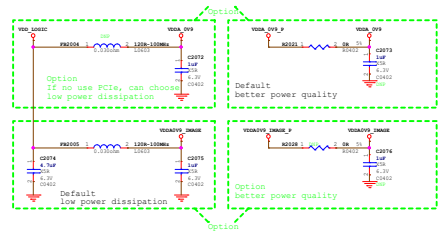

VCCA_1V8, VCCA1V8_IMAGE ------select

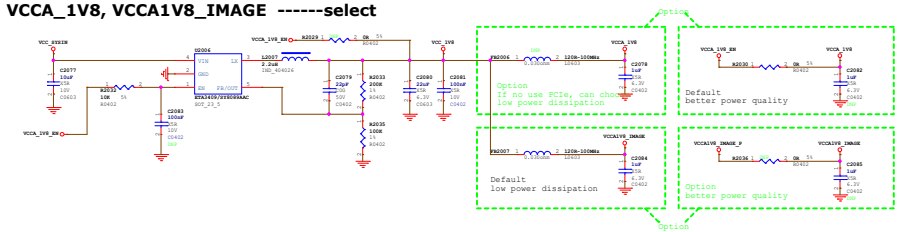

USB3_OTG0_VBUSDET

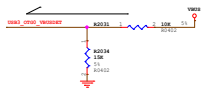

Peripheral power input source

VCC_3V3 (Power OFF under SLEEP)

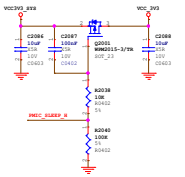

VCC3V3_SD

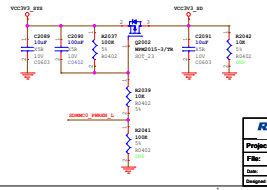

Rockchip 瑞芯微电子	Rockchip Electronics Co., Ltd
Project:	RK3566_Tablet_REF_SCH
File:	28.Power_1Cell_CH3_RK817-5
Date:	Wednesday, September 27, 2023
Rev:	V2.0
Designed by:	Zhangjh
Reviewed by:	Default
Sheet:	31 of 60

Rockchip Confidential

USB Type-C Port

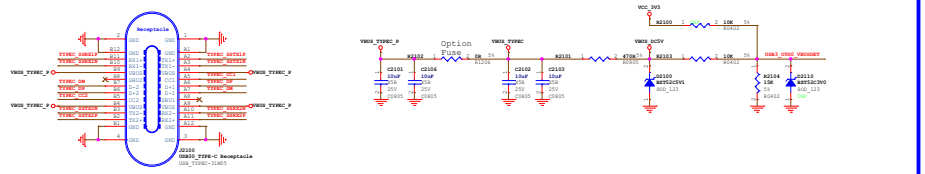

ESD

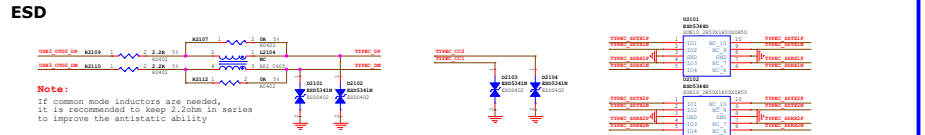

Note:
If common mode inductors are needed,
it is recommended to keep 2.2ohm in series
to improve the antistatic ability

PMIC RK809 DCDC

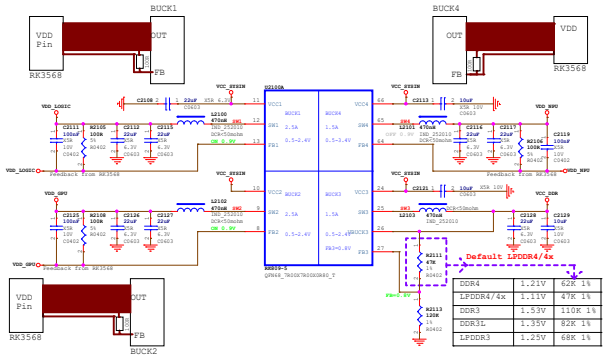

DDR4	1.21V	62K 1%
LPDDR4/4x	1.11V	47K 1%
DDR3	1.53V	110K 1%
DDR3L	1.35V	82K 1%
LPDDR3	1.25V	68K 1%

PMIC RK809 LDO

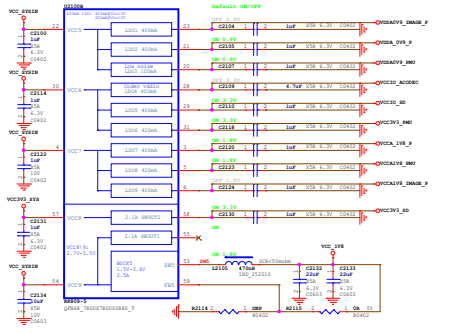

Differential Channel Crossbar Switch

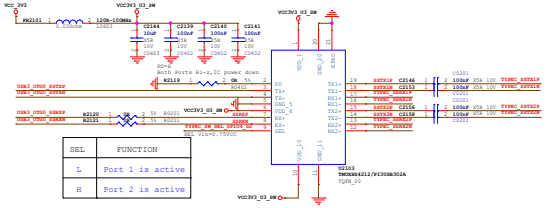

SEL	FUNCTION
L	Port 1 is active
H	Port 2 is active

USB Type-C Controller(PD)

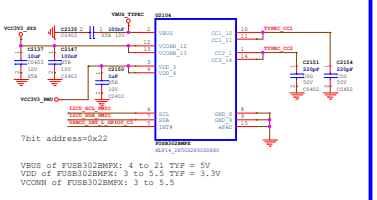

?bit address=0x22

VBUS of FUSB302BMPX: 4 to 21 TYP = 5V
VDD of FUSB302BMPX: 3 to 5.5 TYP = 3.3V
VCONN of FUSB302BMPX: 3 to 5.5

PMIC RK809 Managerment

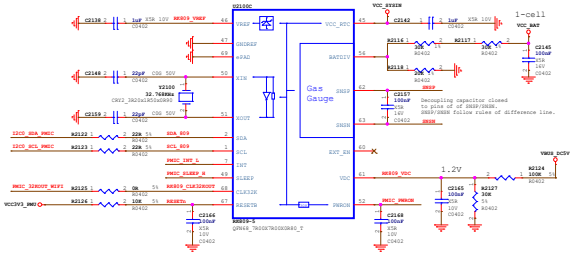

PMIC RK809 CODEC

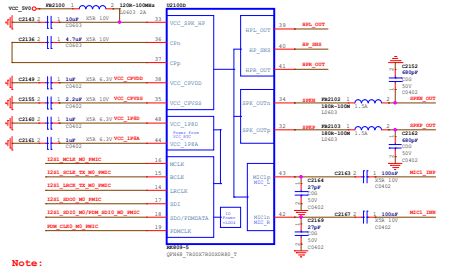

Note:
If RK809-5 codec is not used,
then Pin 14,15,16,17,19,40 Tie VSS
Pin 18,36,37,38,35,39,41,34,32,43,42
Leave floating

Charger IC

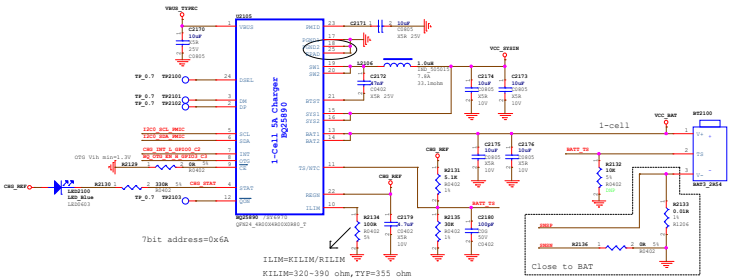

?bit address=0x6A

ILIM=KILIM/RILIM
KILIM=320-390 ohm,TYP=355 ohm

VDDA_0V9, VDDA0V9_IMAGE ------select

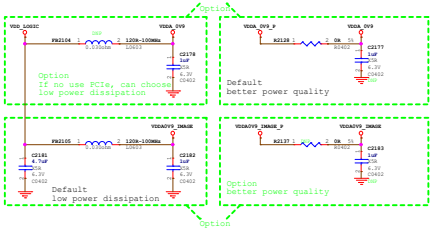

VCCA_1V8, VCCA1V8_IMAGE ------select

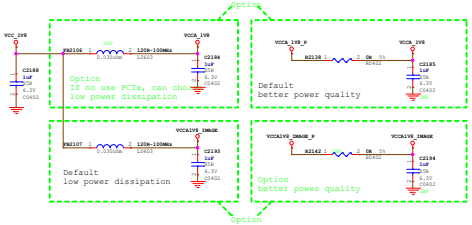

VCC3V3_SYS

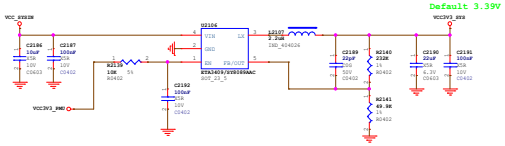

Peripheral power input source

VCC_5V0

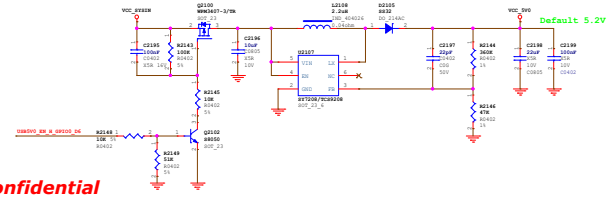

VCC_3V3 (Power OFF under SLEEP)

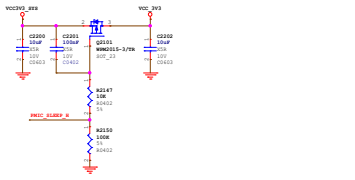

Rockchip Confidential

Rockchip	Rockchip Electronics Co., Ltd
Project:	RK3568_Tablet_REF_SCH
File:	21.Power_1Cell_GC_RK809-5(Opt)
Date:	Wednesday, September 27, 2023
Rev:	V2.0
Designed by:	Zhangqi
Reviewed by:	Default
Sheet:	20 of 40

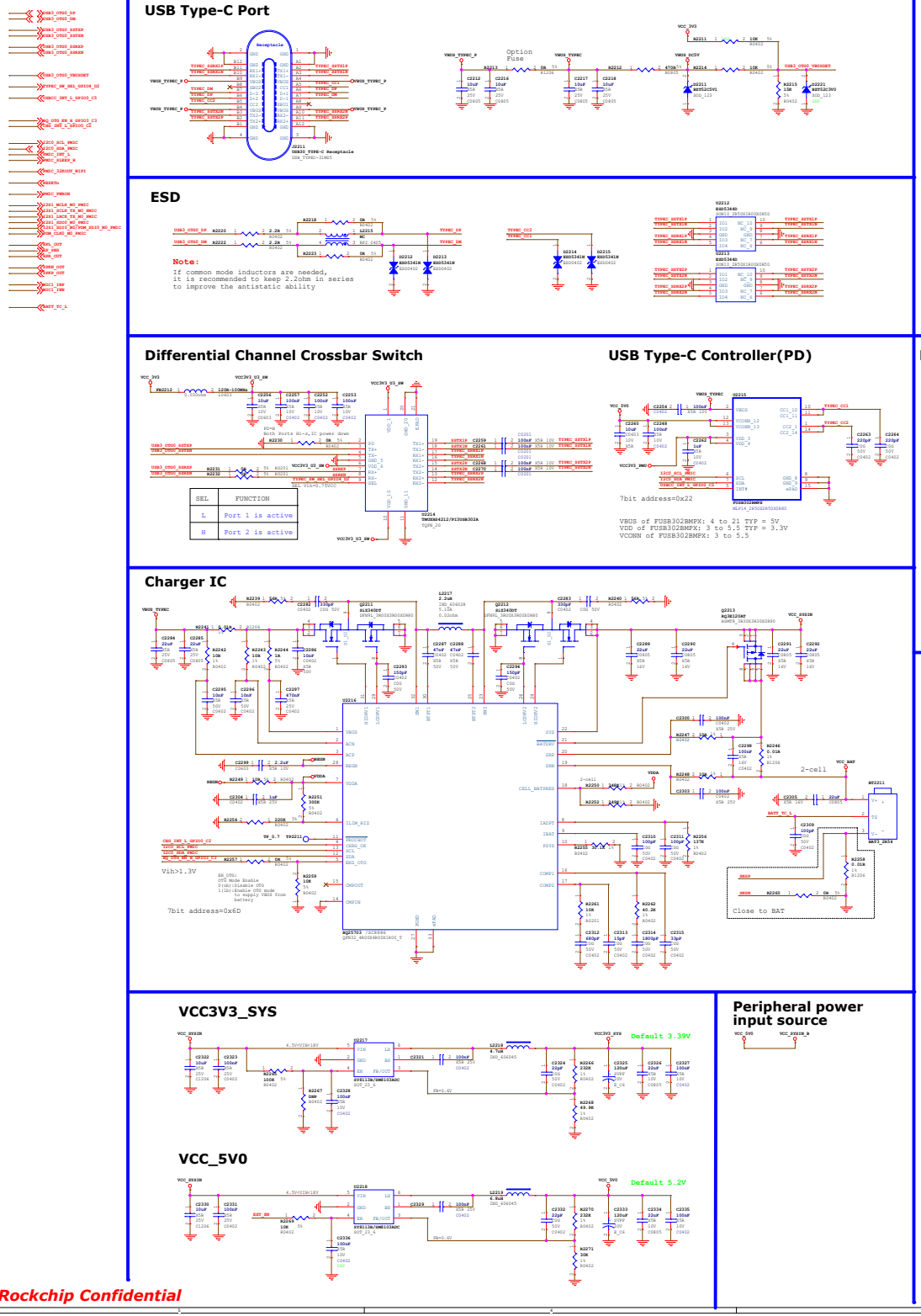
USB Type-C Port
ESD
Note:
If common mode inductors are needed,
it is recommended to keep 2.2ohm in series
to improve the antistatic ability
Differential Channel Crossbar Switch
USB Type-C Controller(PD)
Charger IC
VCC3V3_SYS
VCC_5V0
Peripheral power input source
PMIC RK809 DCDC
PMIC RK809 LDO
PMIC RK809 Managerment
PMIC RK809 CODEC
Note:
If RK809-5 codec is not used,
then Pin 14,15,16,17,19,40 Tie VSS
Pin 18,36,37,38,35,39,41,34,32,43,42
Leave floating
VDDA_0V9, VDDA0V9_IMAGE ------select
VCCA_1V8, VCCA1V8_IMAGE ------select
Rockchip Confidential
Rockchip Electronics Co., Ltd
Project: RK3568_Tablet_REF_SCH
File: 22.Power_2Cell_QC_RK809-5(Opt)

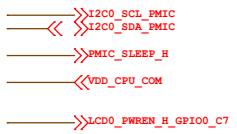

VDD_CPU

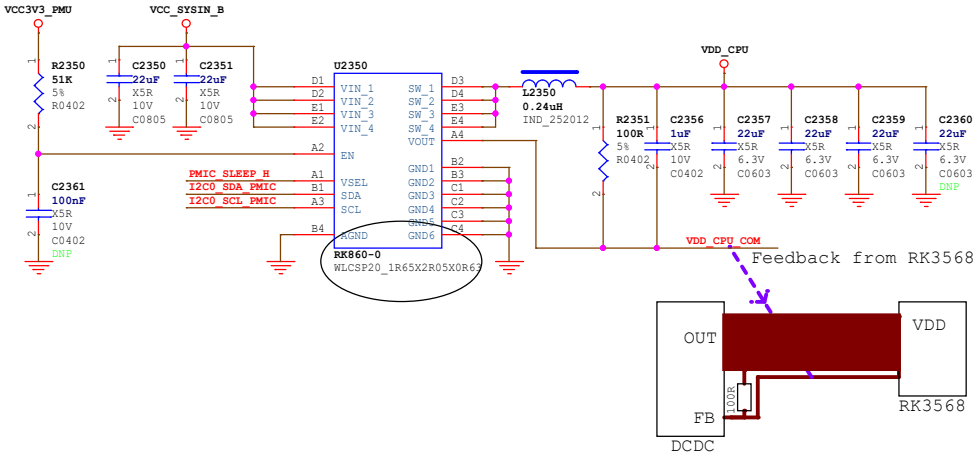

USB/MIPI PHY Power

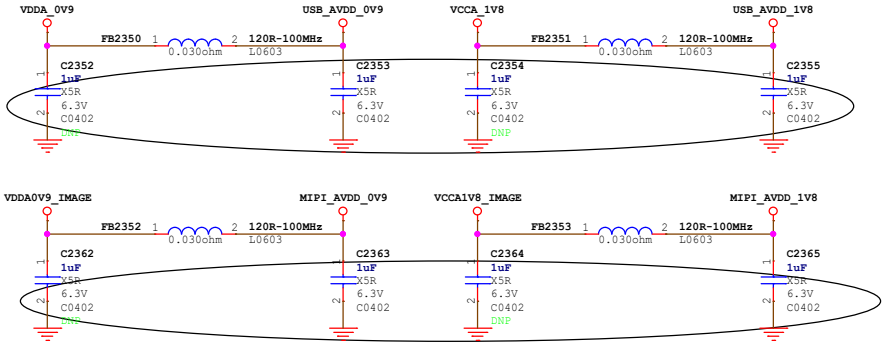

LCD Power

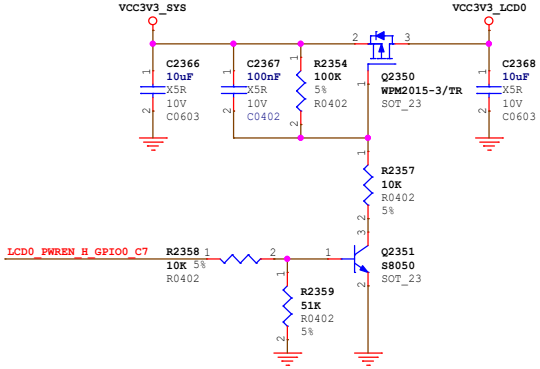

WIFI/BT IO and CTL IO Power

PMUIO2,VCCIO4 IO Domain Power Supply select

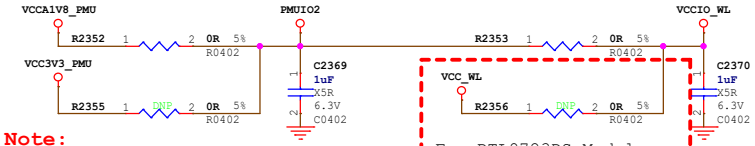

Note:

Please choose IO voltage values according to the real mounted WIFI module and modify the corresponding software configuration.

For RTL8723DS Module, PMUIO2 = VCC3V3_PMU and VCCIO_WL connect to VCC_WL to ensure the power on sequence.

If a board needs to be compatible with two voltage choices, recommended to enable BOM_ID

Rockchip Confidential

Rockchip 瑞芯微电子	Rockchip Electronics Co., Ltd				
Project:	RK3568_Tablet_REF_SCH				
File:	23.Power_Ext Discrete				
Date:	Wednesday, September 27, 2023			Rev:	V2.0
Designed by:	Zhangdz	Reviewed by:	Default	Sheet:	24 of 62

FLASH_VOL_SEL

Flash Power Manage

	VCCIO2 domain voltage: Recommend voltage value (VCCIO_FLASH)	FLASH_VOL_SEL state decided to VCCIO2 domain IO driven by default
eMMC	1.8V	FLASH_VOL_SEL --> Logic=H
Nand flash	Default 3.3V, Optional 1.8V	FLASH_VOL_SEL --> Logic=L(Default)
SPI flash	Default 1.8V, Optional 3.3V	FLASH_VOL_SEL --> Logic=H(Default)

Note:

According to the actual choice of mounted
Cannot be mounted at the same time

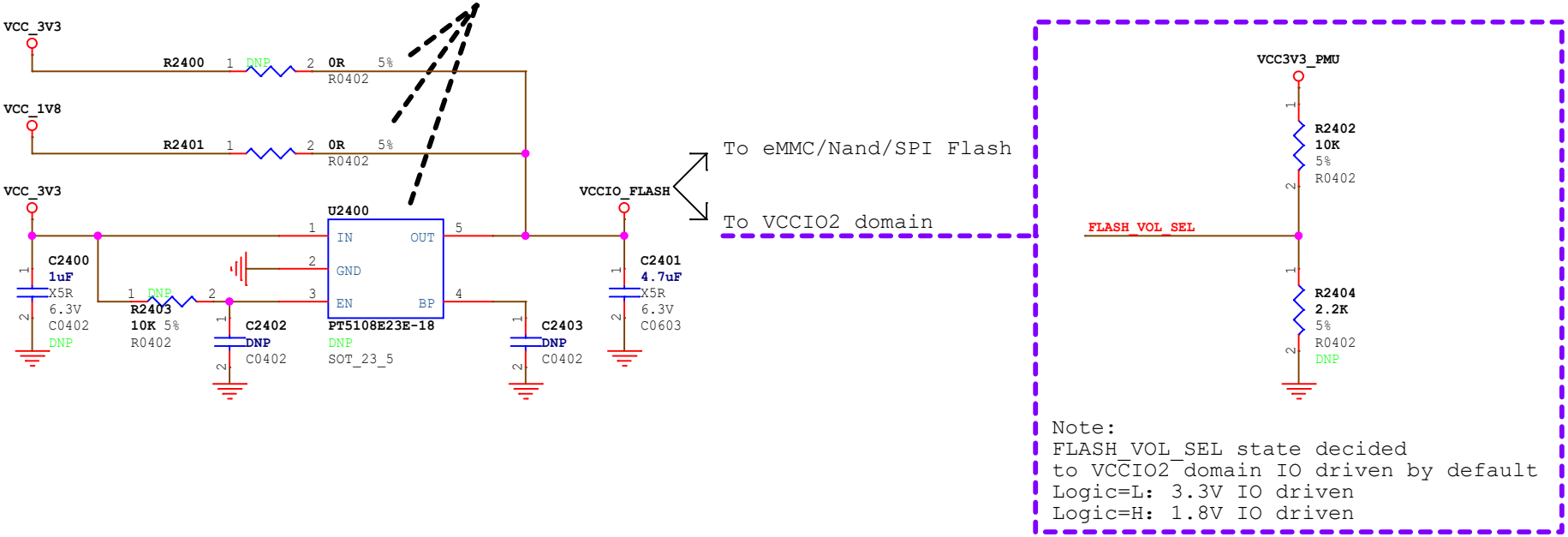

When VCCIO2 voltage is connected to 1.8V, FLASH_VOL_SEL must be high
When VCCIO2 voltage is connected to 3.3V, FLASH_VOL_SEL must be low
If VCCIO2 power supply voltage and FLASH_VOL_SEL fails to meet the above relationship,
its function will be abnormally(for example, it cannot be started normally) or IO will be damaged.

Rockchip Confidential

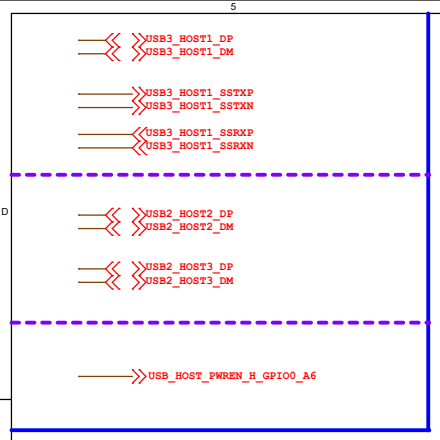

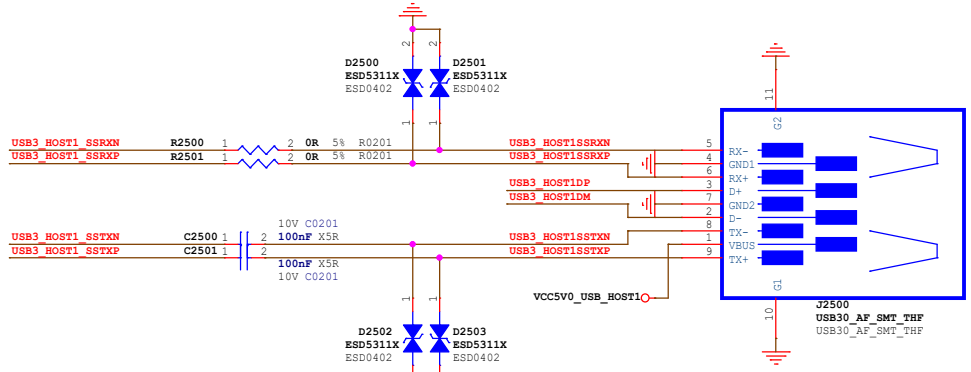

USB3.0 HOST1

Note:
The ESD of USB3.0 signal cannot be change at will
If it needs to be change,
the same specification must be selected.

Cj<=0.4pF

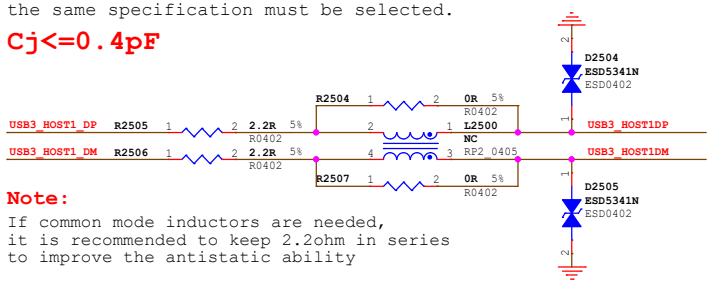

Note:

If common mode inductors are needed,
it is recommended to keep 2.2ohm in series
to improve the antistatic ability

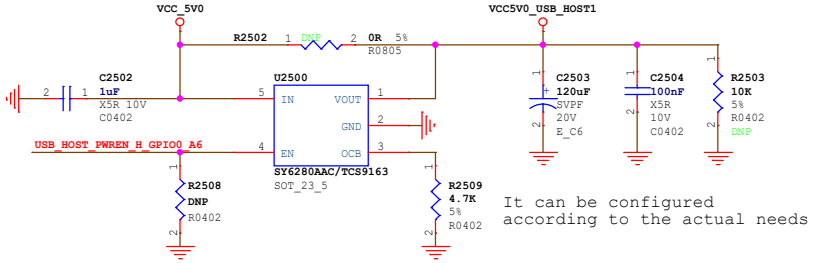

It can be configured
according to the actual needs

USB2.0 HOST2

And M.2 module Option

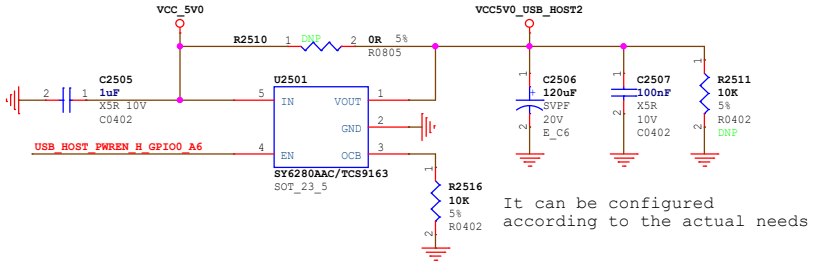

It can be configured
according to the actual needs

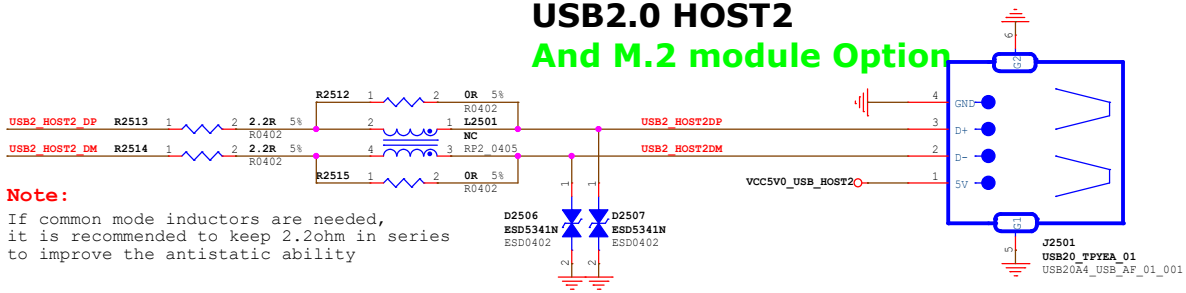

Note:

If common mode inductors are needed,
it is recommended to keep 2.2ohm in series
to improve the antistatic ability

USB2.0 HOST3

And 4G module Option

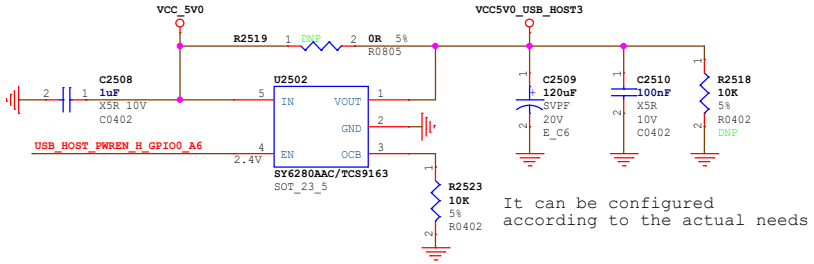

It can be configured
according to the actual needs

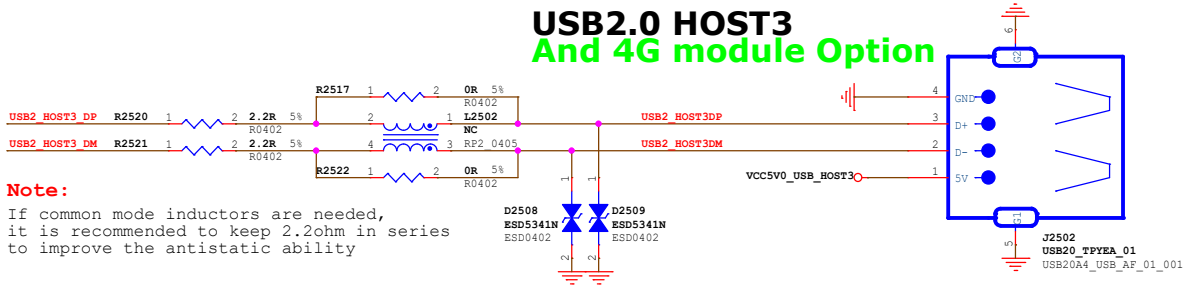

Note:

If common mode inductors are needed,
it is recommended to keep 2.2ohm in series
to improve the antistatic ability

Rockchip Confidential

Rockchip 瑞芯微电子	Rockchip Electronics Co., Ltd				
Project:	RK3568_Tablet_REF_SCH				
File:	25.USB2/USB3 HOST Port				
Date:	Wednesday, September 27, 2023			Rev:	V2.0
Designed by:	Zhangdz	Reviewed by:	Default	Sheet:	26 of 62

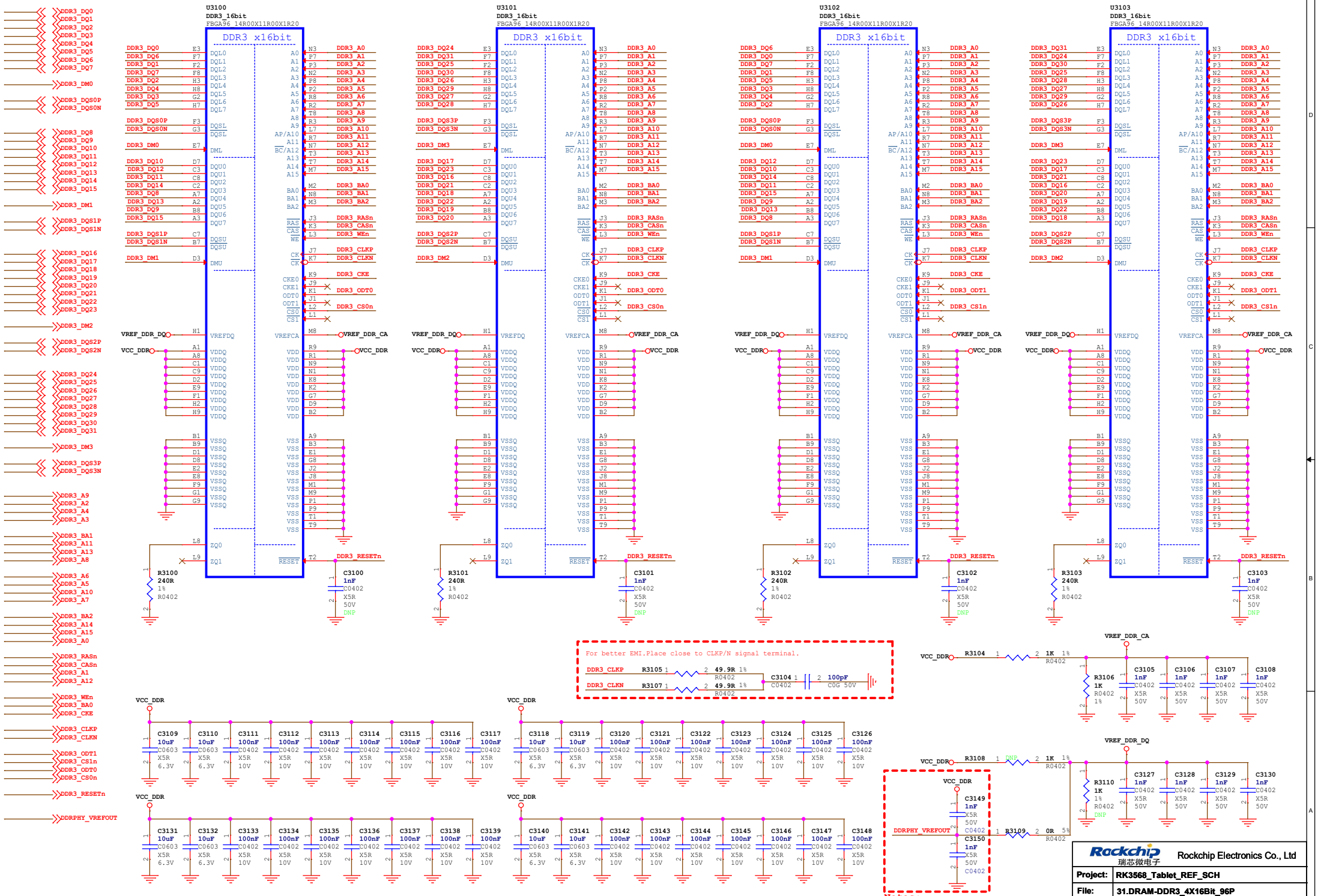

Rockchip Confidential

DDR4P216SD6

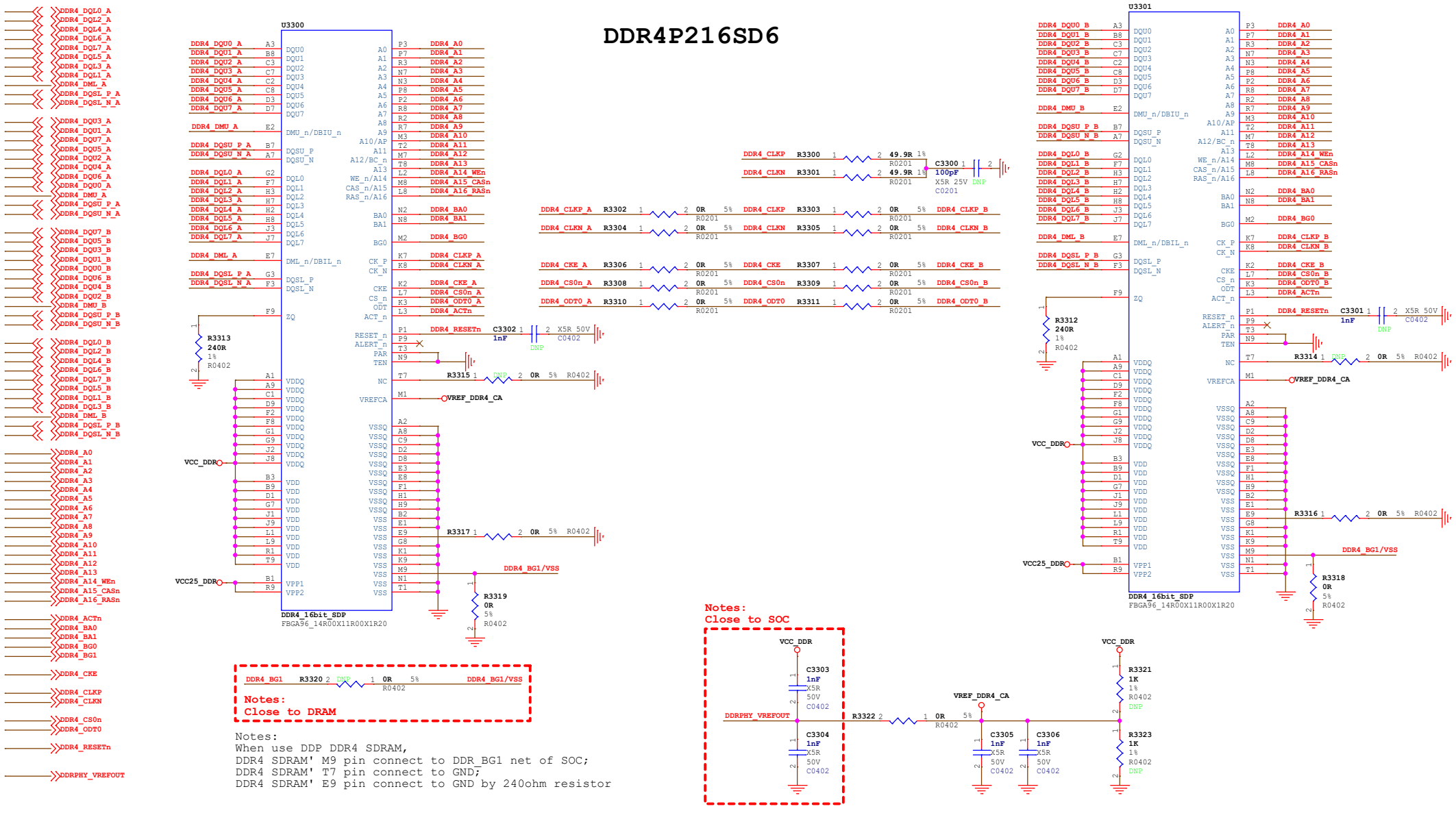

Notes:
When use DDP DDR4 SDRAM,
DDR4 SDRAM' M9 pin connect to DDR_BG1 net of SOC;
DDR4 SDRAM' T7 pin connect to GND;
DDR4 SDRAM' E9 pin connect to GND by 240ohm resistor

Rockchip Confidential

Rockchip 瑞芯微电子	Rockchip Electronics Co., Ltd		
Project:	RK3568_Tablet_REF_SCH		
File:	33.DRAM-DDR4_2x16bit_96P		
Date:	Wednesday, September 27, 2023	Rev:	V2.0
Designed by: Zhangdz	Reviewed by: Default	Sheet:	28 of 62

DDR4P416DD6

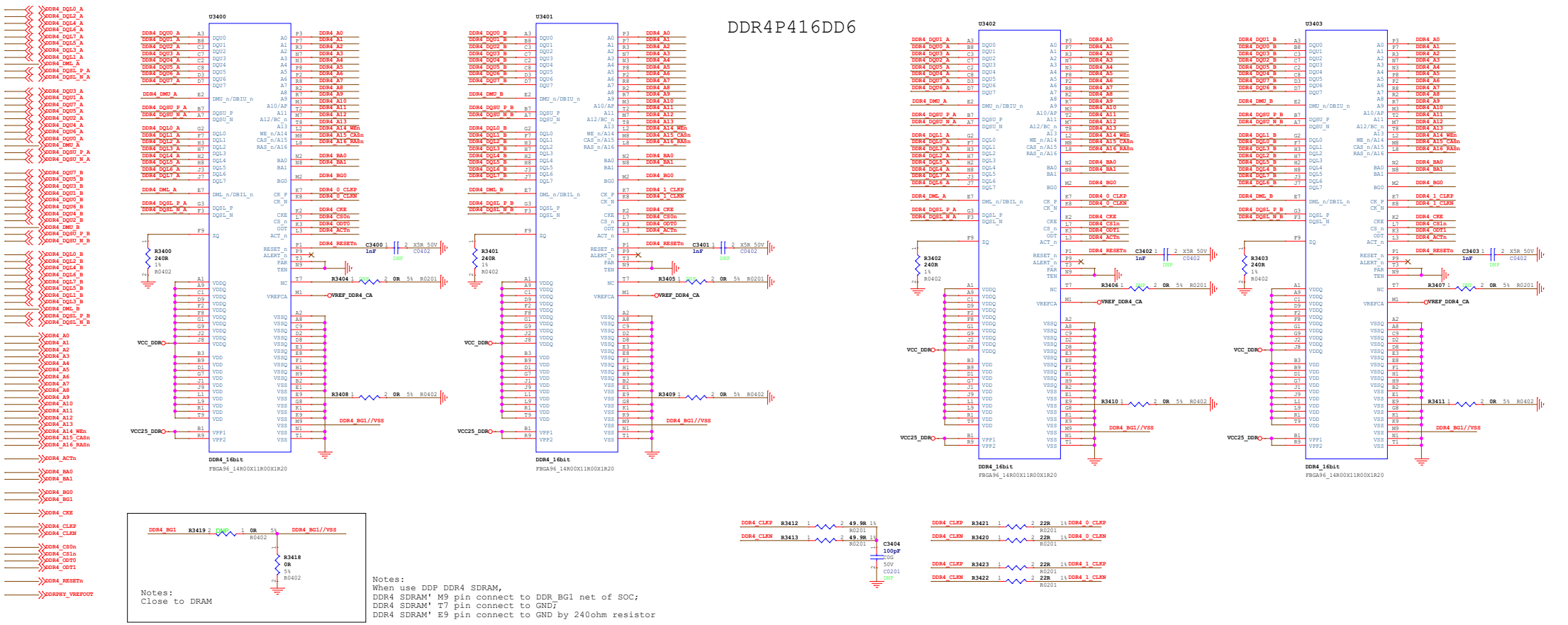

Notes:
Close to DRAM

Notes:
When use DDP DDR4 SDRAM,
DDR4 SDRAM' M9 pin connect to DDR_BG1 net of SOC;
DDR4 SDRAM' T7 pin connect to GND;
DDR4 SDRAM' E9 pin connect to GND by 240ohm resistor

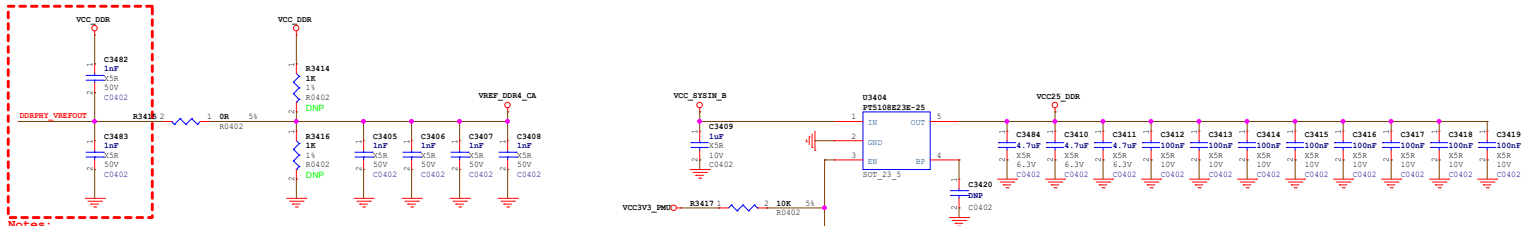

Notes:
Close to SOC

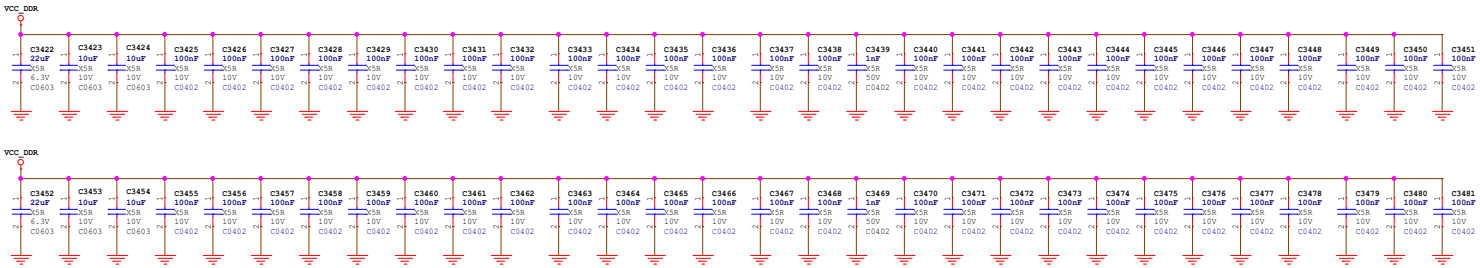

Rockchip Confidential

Rockchip 瑞芯微电子	Rockchip Electronics Co., Ltd		
Project:	RK3568_Tablet_REF_SCH		
File:	34.DRAM-DDR4_4x16Bit_96P		
Date:	Wednesday, September 27, 2023	Rev:	V2.0
Designed by: Zhangtz	Reviewed by: Default	Sheet:	29 of 62

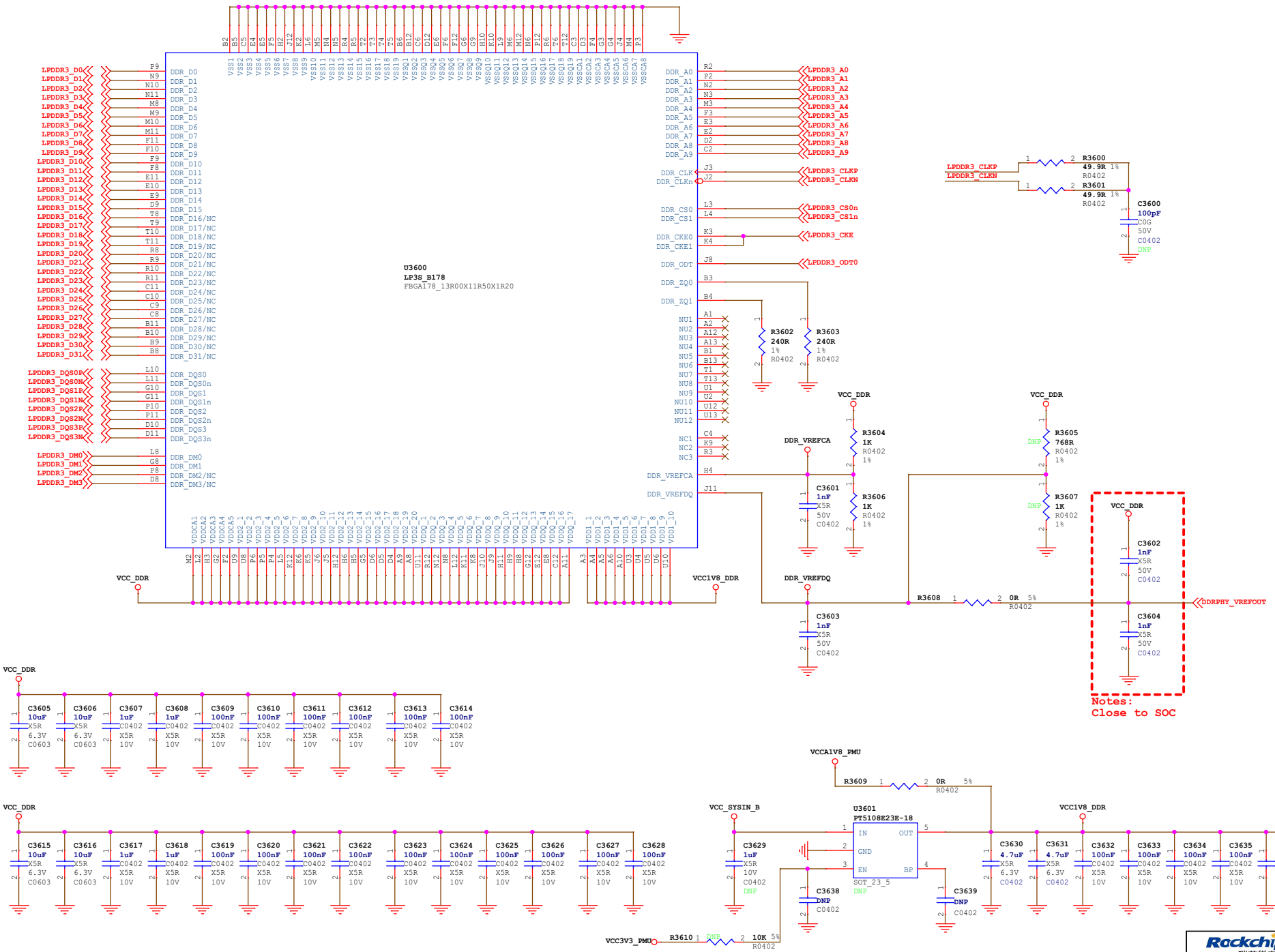

Rockchip Confidential

Rockchip 瑞芯微电子	Rockchip Electronics Co., Ltd				
Project:	RK3568_Tablet_REF_SCH				
File:	36.DRAM-LPDDR3_1X32bit_178P				
Date:	Wednesday, September 27, 2023			Rev:	V2.0
Designed by:	Zhangdz	Reviewed by:	Default	Sheet:	30 of 62

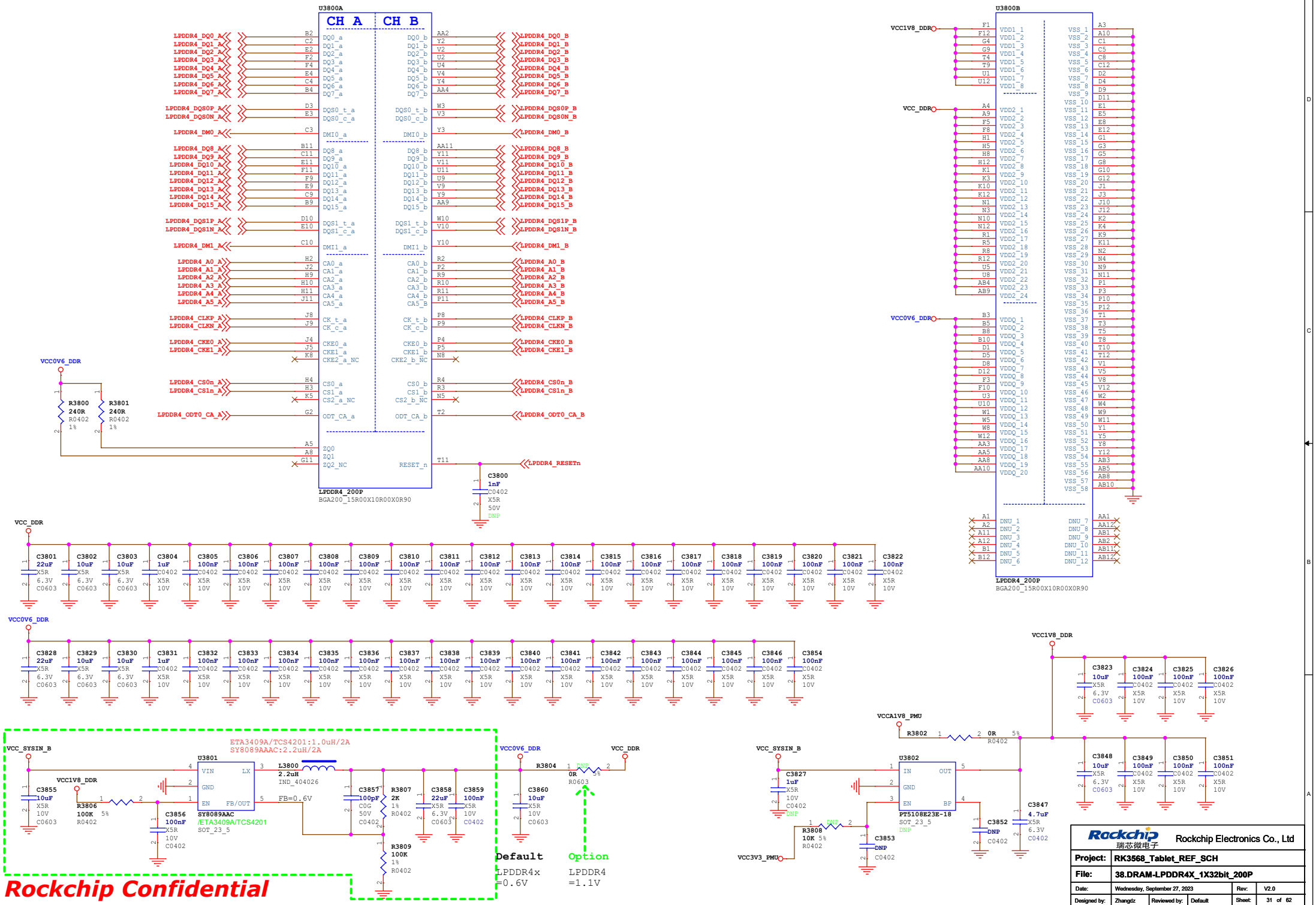
U3800A
CH A
CH B
LPDDR4_200P
BGA200_15R00X10R00X0R90
U3800B
LPDDR4_200P
BGA200_15R00X10R00X0R90
VCC1V8_DDR
VCC_DDR
VCC0V6_DDR
R3800 240R R0402 1%
R3801 240R R0402 1%
C3800 1nF C0402 X5R 50V DNP
VCC_SYSIN_B
U3801
ETA3409A/TCS4201:1.0uH/2A
SY8089AAAC:2.2uH/2A
L3800 2.2uH IND_404026
FB=0.6V
SY8089AAC /ETA3409A/TCS4201 SOT_23_5
R3804 0R R0603
Default LPDDR4x =0.6V
Option LPDDR4 =1.1V
VCCA1V8_PMU
R3802 0R R0402
U3802
PT5108E23E-18 SOT_23_5
VCC3V3_PMU
Rockchip Confidential
Rockchip Electronics Co., Ltd
Project: RK3568_Tablet_REF_SCH
File: 38.DRAM-LPDDR4X_1X32bit_200P
Date: Wednesday, September 27, 2023
Rev: V2.0
Designed by: Zhangdz
Reviewed by: Default
Sheet: 31 of 62

eMMC Flash

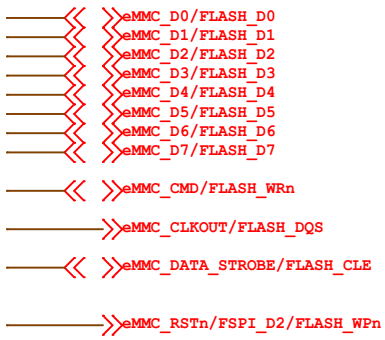

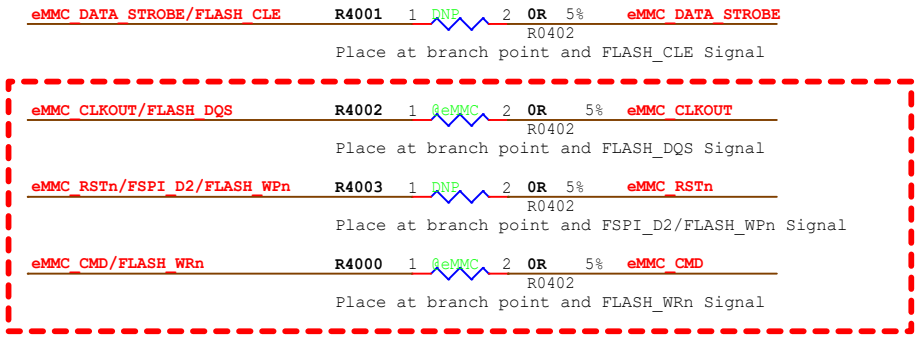

Note:

No need to double layout with Nand Flash, 0R resistor can be omitted

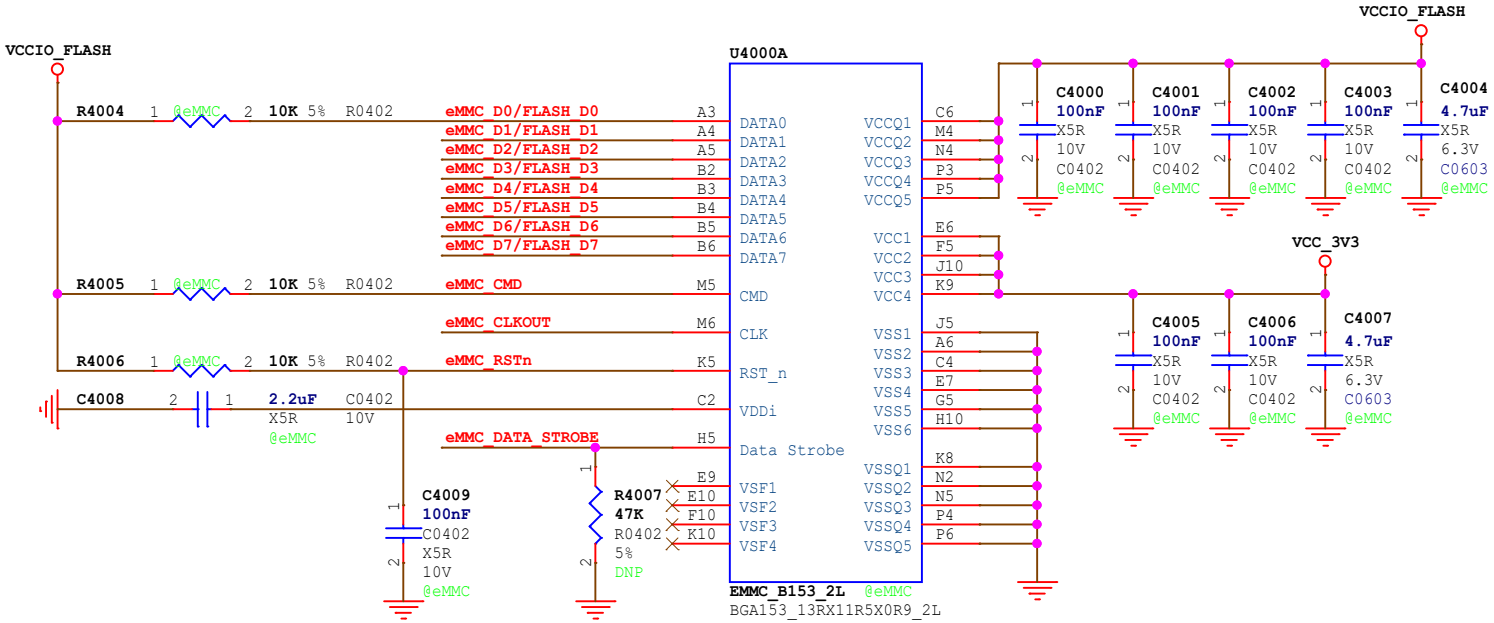

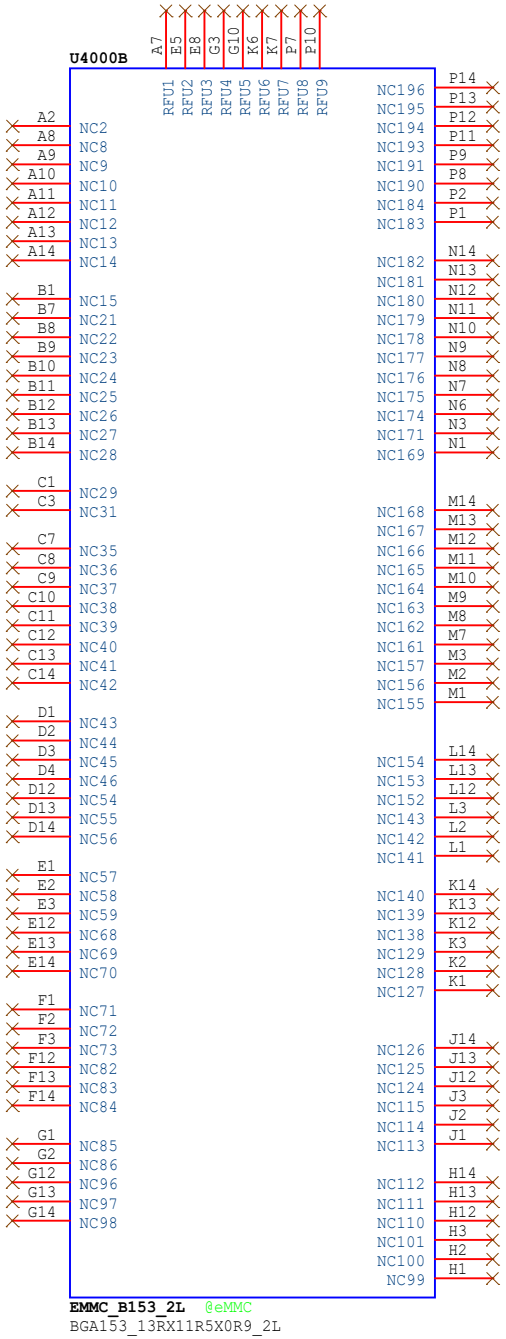

Note:

If Flash is compatible, please notice
when eMMC is used, the option is that @eMMC is mounted, @Nand is not mounted,@SPI Flash is not mounted
when Nand is used, the option is that @Nand is mounted, @eMMC is not mounted,@SPI Flash is not mounted
when SPI Flash is used, the option is that SPI Flash is mounted, @eMMC is not mounted,@Nand is not mounted

Rockchip Confidential

Rockchip 瑞芯微电子	Rockchip Electronics Co., Ltd				
Project:	RK3568_Tablet_REF_SCH				
File:	40.Flash-eMMC Flash				
Date:	Wednesday, September 27, 2023			Rev:	V2.0
Designed by:	Zhangdz	Reviewed by:	Default	Sheet:	32 of 62

Nand Flash

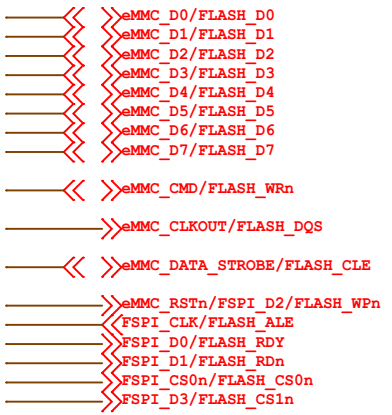

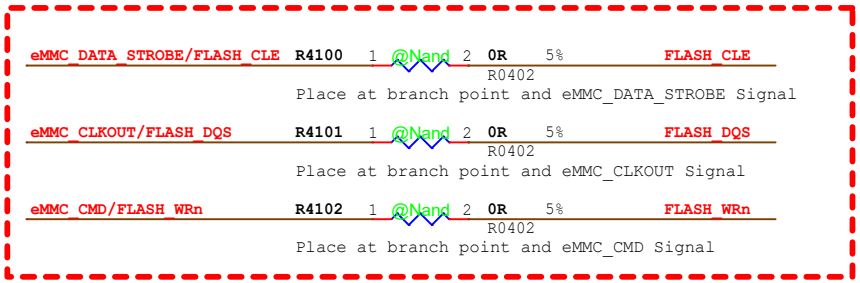

Note:

No need to double layout with eMMC, 0R resistor can be omitted

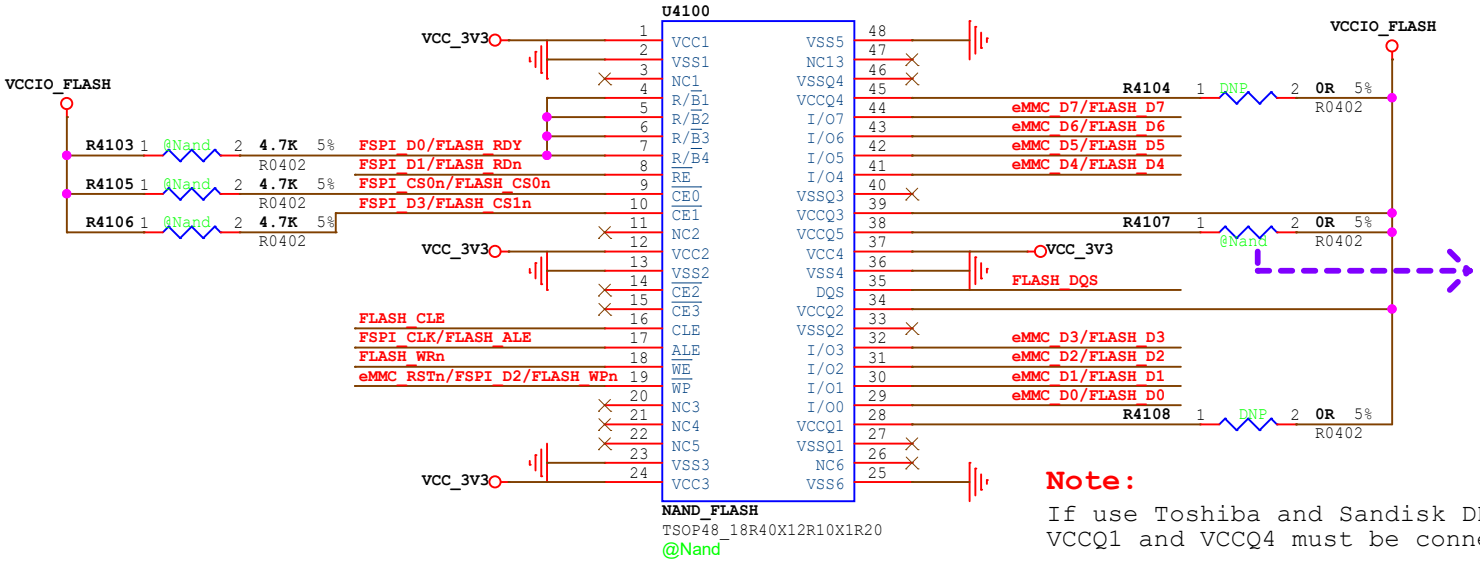

Note:

If use SLC Nand,
This Resistance is DNP

Note:

If use Toshiba and Sandisk DDR mode,
VCCQ1 and VCCQ4 must be connected to VCCIO_FLASH。

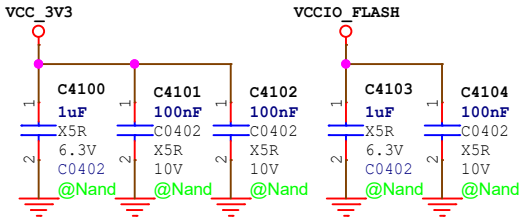

Note:

If Flash is compatible, please notice
when eMMC is used, the option is that @eMMC is mounted, @Nand is not mounted,@SPI Flash is not mounted
when Nand is used, the option is that @Nand is mounted, @eMMC is not mounted,@SPI Flash is not mounted
when SPI Flash is used, the option is that SPI Flash is mounted, @eMMC is not mounted,@Nand is not mounted

Rockchip Confidential

Rockchip 瑞芯微电子	Rockchip Electronics Co., Ltd				
Project:	RK3568_Tablet_REF_SCH				
File:	41.Flash-Nand Flash(Option)				
Date:	Wednesday, September 27, 2023			Rev:	V2.0
Designed by:	Zhangdz	Reviewed by:	Default	Sheet:	33 of 62

MicroSD Card

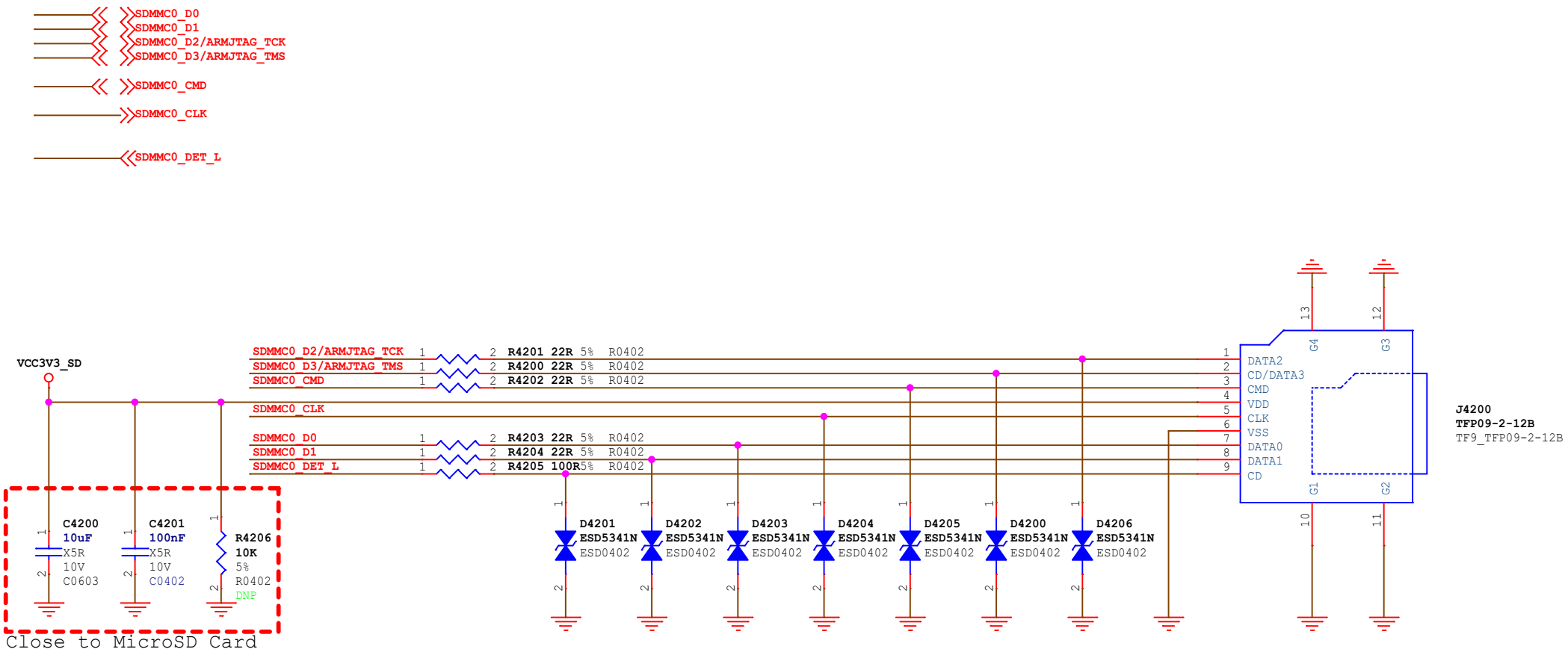

MicroSD Card

Rockchip 瑞芯微电子	Rockchip Electronics Co., Ltd				
Project:	RK3568_Tablet_REF_SCH				
File:	42.Flash-MicroSD Card				
Date:	Wednesday, September 27, 2023			Rev:	V2.0
Designed by:	Zhangdz	Reviewed by:	Default	Sheet:	34 of 62

Rockchip Confidential

DVP_PWREN0_H_GPIO0_D3

Camera Power supply

If there are multiple cameras,
Please evaluate whether the supply current is sufficient.
Please confirm whether the voltage and power on sequence of different cameras are the same

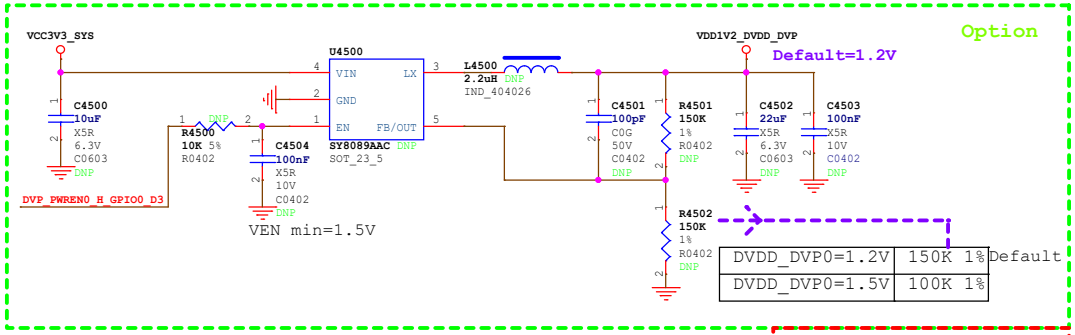

DVDD_DVP0=1.2V	150K 1%	Default
DVDD_DVP0=1.5V	100K 1%	

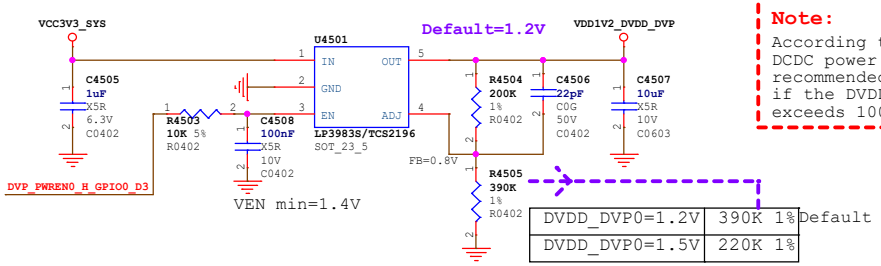

DVDD_DVP0=1.2V	390K 1%	Default
DVDD_DVP0=1.5V	220K 1%	

Note:
According to camera model,
DCDC power supply is
recommended
if the DVDD current
exceeds 100mA

Note:
The power supply of DVDD refer to
camera module specs.

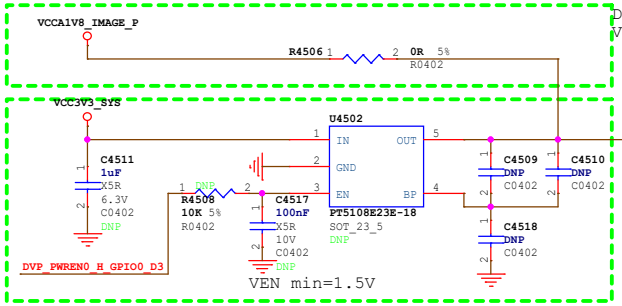

Default:
VCCA1V8_IMAGE When select VCC_1V8

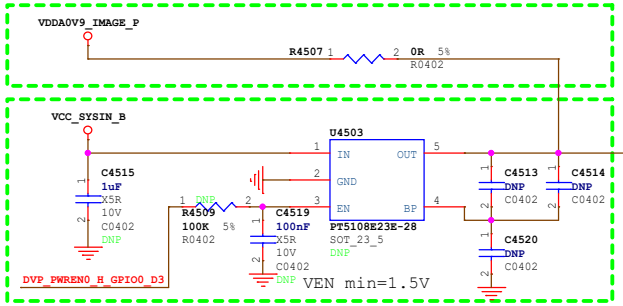

Default
VDDA0V9_IMAGE When select VDD_LOGIC
RK817-5 LDO8 Configure 2.8V output
RK809-5 LDO1 Configure 2.8V output

Note:
Adjust the power on sequence according to the camera model
eg:GC8034
Power on Sequence
1.8V-->1.2V-->2.8V--->MCLK-->PWDN--->RST

Rockchip Confidential

CIF Camera

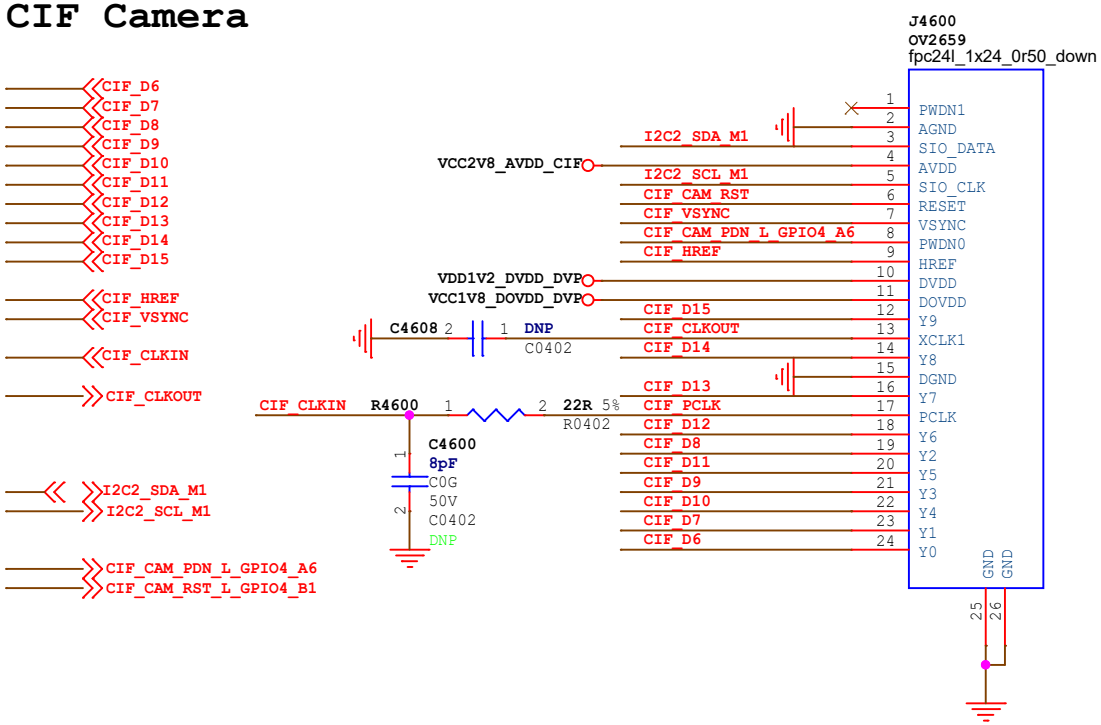

Mode	16bit	12bit	10bit	8bit
CIF_D0	D0	--	--	--
CIF_D1	D1	--	--	--
CIF_D2	D2	--	--	--
CIF_D3	D3	--	--	--
CIF_D4	D4	D0	--	--
CIF_D5	D5	D1	--	--
CIF_D6	D6	D2	D0	--
CIF_D7	D7	D3	D1	--
CIF_D8	D8	D4	D2	D0
CIF_D9	D9	D5	D3	D1
CIF_D10	D10	D6	D4	D2
CIF_D11	D11	D7	D5	D3
CIF_D12	D12	D8	D6	D4
CIF_D13	D13	D9	D7	D5
CIF_D14	D14	D10	D8	D6
CIF_D15	D15	D11	D9	D7

BT1120 16bit Mode:
Default: D0-D7 <--> Y0-Y7 , D8-D15 <--> C0-C7
Swap ON: D0-D7 <--> C0-C7 , D8-D15 <--> Y0-Y7

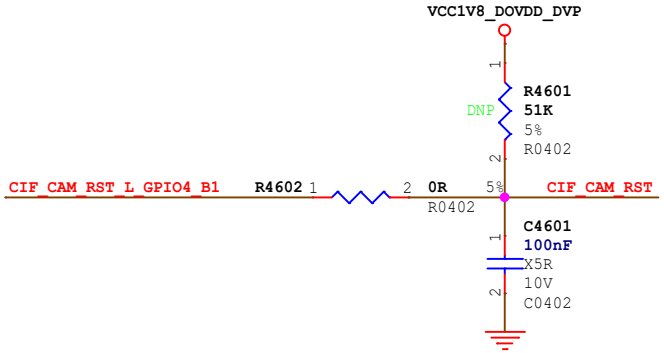

Note:

Camera MCLK can select
the following clock:
1:CAM_CLKOUT0
2:CAM_CLKOUT1
3:CIF_CLKOUT
4:REFCLK_OUT(24MHz)

Attention to the voltage matching

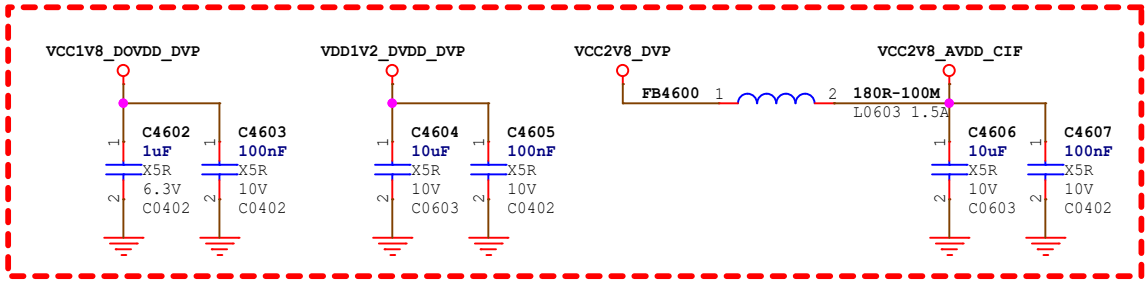

Close to FPC Connector

Rockchip 瑞芯微电子	Rockchip Electronics Co., Ltd				
Project:	RK3568_Tablet_REF_SCH				
File:	46.VI-Camera_CIF				
Date:	Wednesday, September 27, 2023			Rev:	V2.0
Designed by:	Zhangdz	Reviewed by:	Default	Sheet:	36 of 62

MIPI Camera:MIPI_CSI_RX 1 x 4Lanes

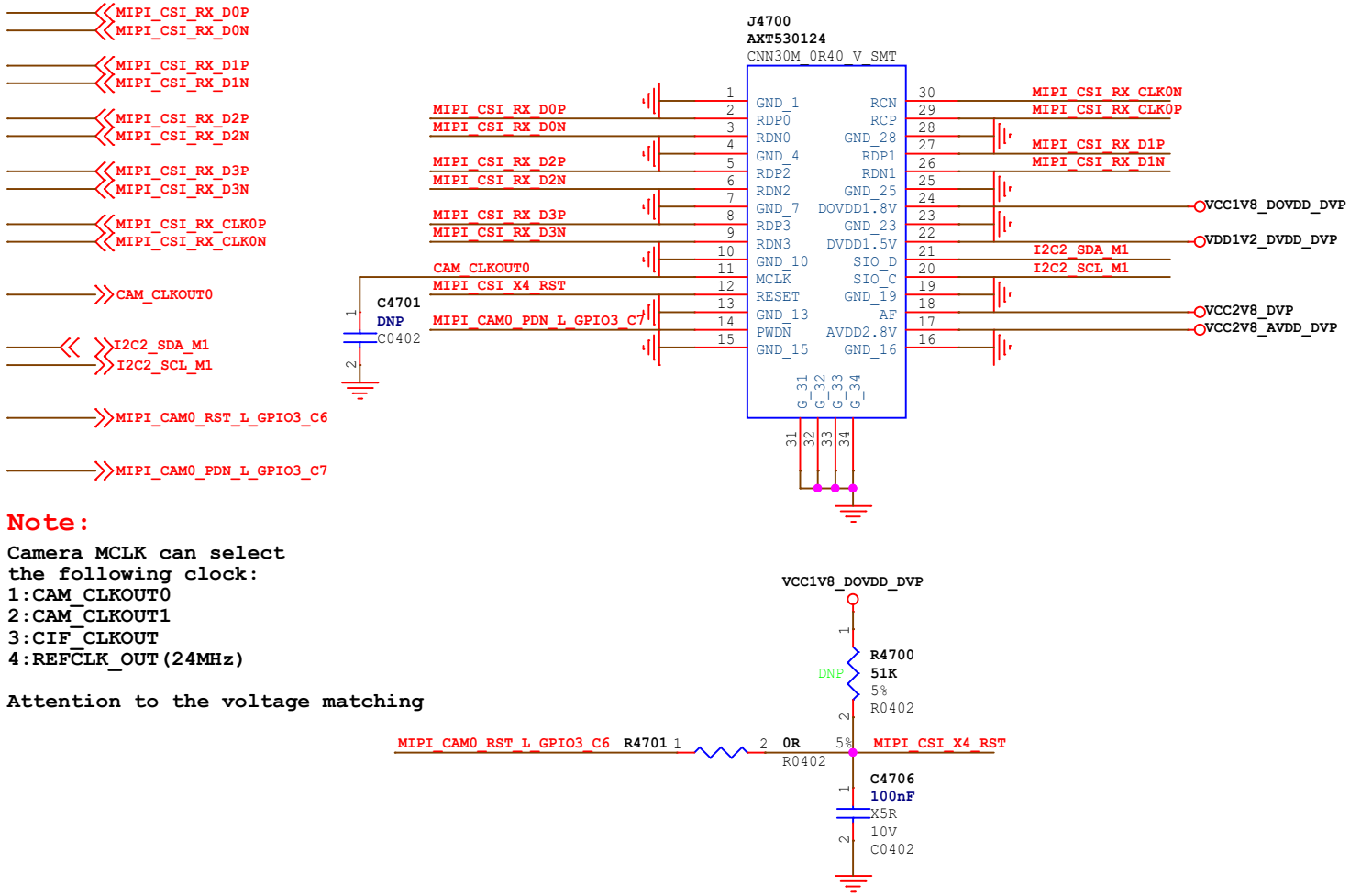

Note:

Camera MCLK can select the following clock:
1:CAM_CLKOUT0
2:CAM_CLKOUT1
3:CIF_CLKOUT
4:REFCLK_OUT(24MHz)

Attention to the voltage matching

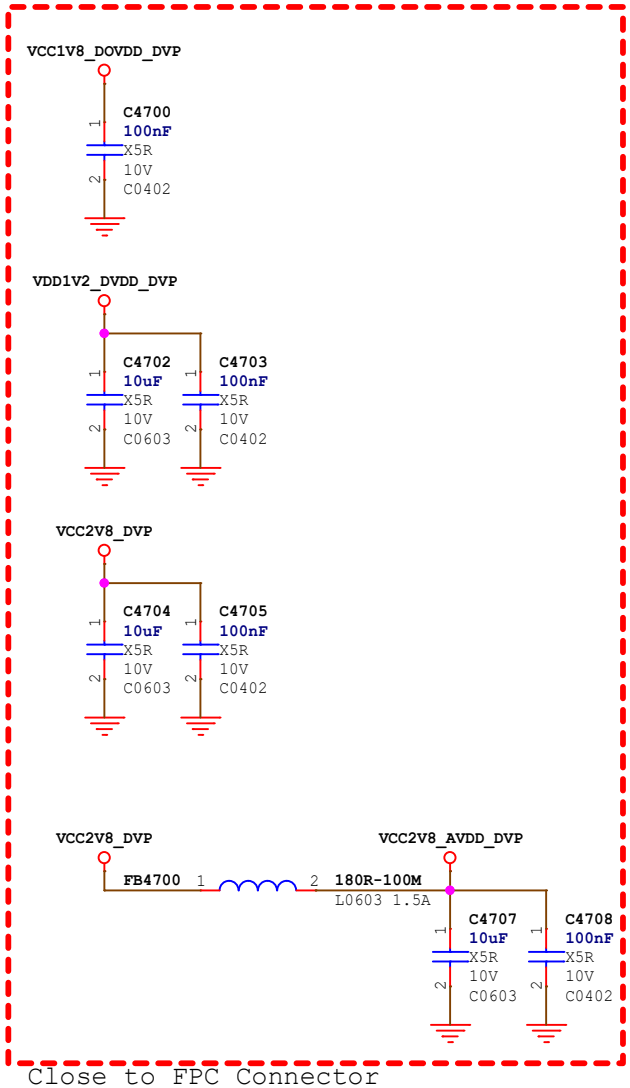

Close to FPC Connector

Rockchip 瑞芯微电子	Rockchip Electronics Co., Ltd				
Project:	RK3568_Tablet_REF_SCH				
File:	47.VI-Camera_MIPI_CSI_1x 4Lanes				
Date:	Wednesday, September 27, 2023			Rev:	V2.0
Designed by:	Zhangdz	Reviewed by:	Default	Sheet:	37 of 62

Rockchip Confidential

MIPI Camera:MIPI_CSI_RX 1x2Lanes and 1x2Lanes

MIPI_CSI_RX_D0P
MIPI_CSI_RX_D0N
MIPI_CSI_RX_D1P
MIPI_CSI_RX_D1N
MIPI_CSI_RX_D2P
MIPI_CSI_RX_D2N
MIPI_CSI_RX_D3P
MIPI_CSI_RX_D3N
MIPI_CSI_RX_CLK0P
MIPI_CSI_RX_CLK0N
MIPI_CSI_RX_CLK1P
MIPI_CSI_RX_CLK1N
CAM_CLKOUT0
CAM_CLKOUT1
MIPI_CAM0_RST_L_GPIO3_C6
MIPI_CAM0_PDN_L_GPIO3_C7
MIPI_CAM1_RST_L_GPIO3_D0
MIPI_CAM1_PDN_L_GPIO3_D1
I2C2_SDA_M1
I2C2_SCL_M1
I2C4_SDA_M0
I2C4_SCL_M0

Camera0:MIPI_CSI_RX 2Lanes

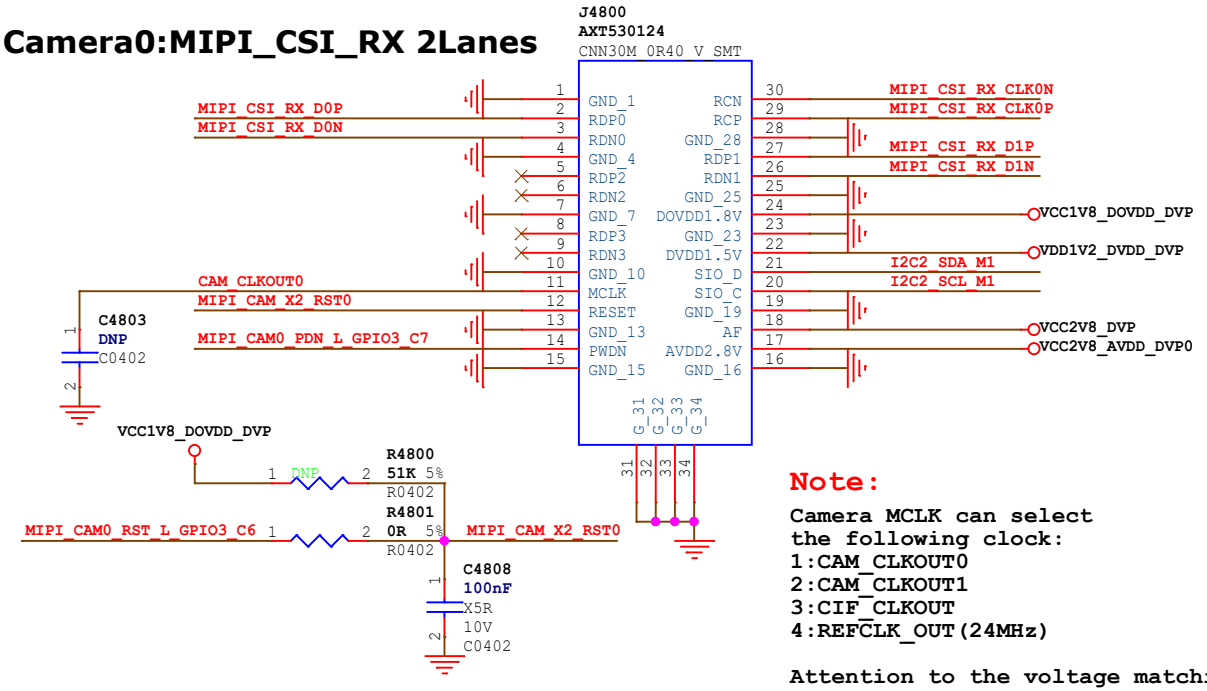

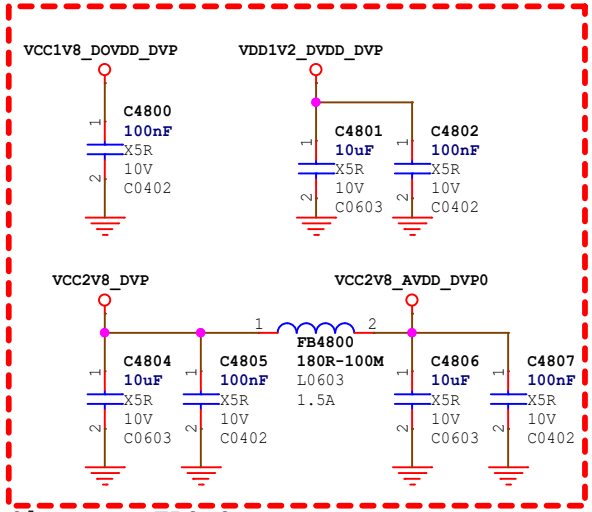

Close to FPC Connector

Note:

Camera MCLK can select the following clock:
1:CAM_CLKOUT0
2:CAM_CLKOUT1
3:CIF_CLKOUT
4:REFCLK_OUT(24MHz)

Attention to the voltage matching

Camera1:MIPI_CSI_RX 2Lanes

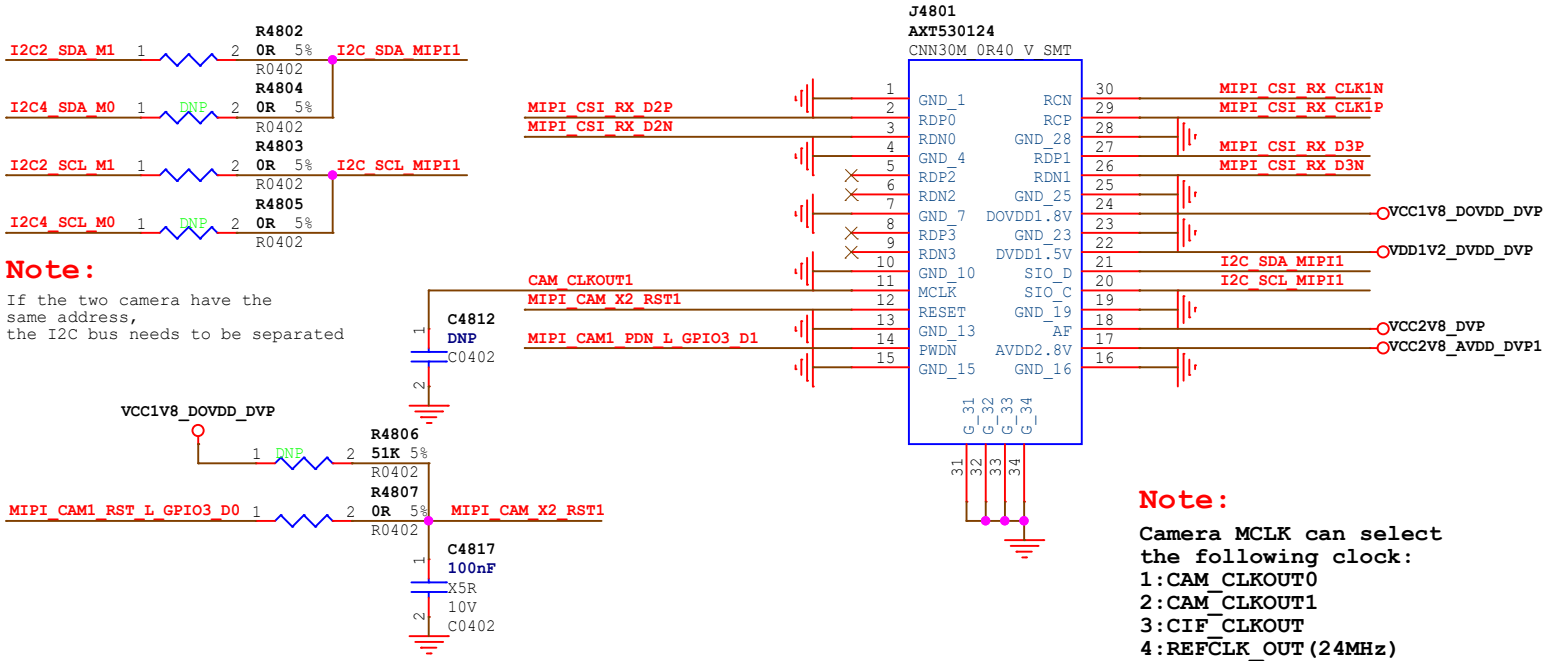

Note:

If the two camera have the same address,
the I2C bus needs to be separated

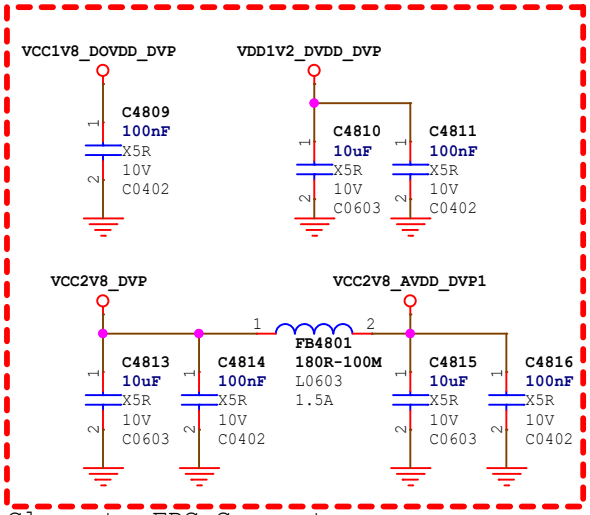

Close to FPC Connector

Note:

Camera MCLK can select the following clock:
1:CAM_CLKOUT0
2:CAM_CLKOUT1
3:CIF_CLKOUT
4:REFCLK_OUT(24MHz)

Attention to the voltage matching

Rockchip Confidential

Rockchip 瑞芯微电子	Rockchip Electronics Co., Ltd				
Project:	RK3568_Tablet_REF_SCH				
File:	48.VI-Camera_MIPI_CSI_2x 2Lanes				
Date:	Wednesday, September 27, 2023			Rev:	V2.0
Designed by:	Zhangdz	Reviewed by:	Default	Sheet:	38 of 62

MIPI Camera:MIPI_CSI_RX 1 x 4Lanes or 1x 2Lanes

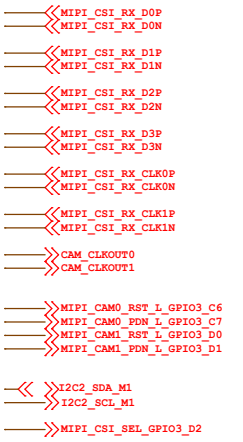

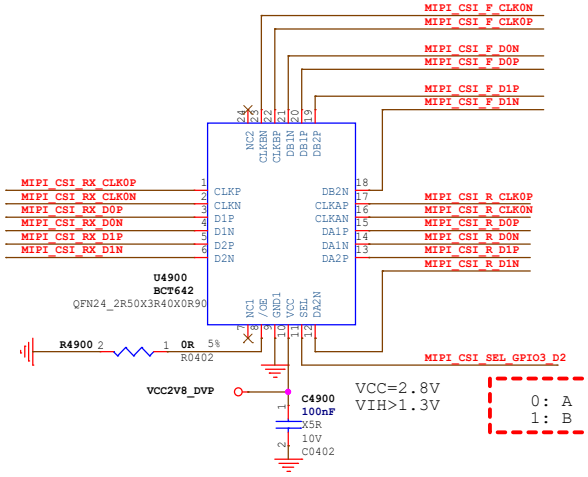

For delay synchronization

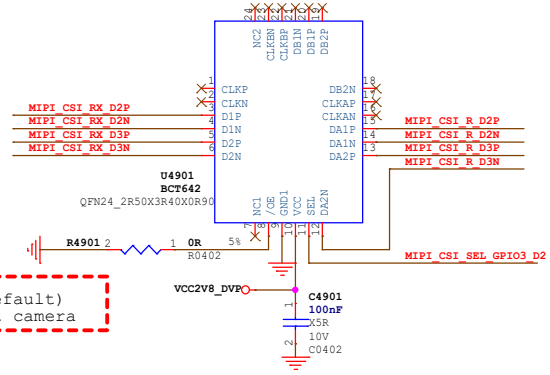

0: A 4LANE Rear camera(default)
1: B 2LANE(LANE 0&1) Front camera

Rear Camera:MIPI_CSI_RX 4Lanes

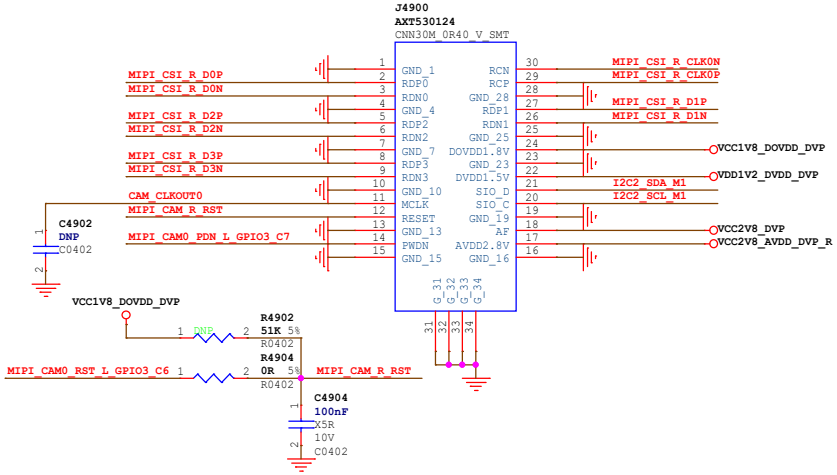

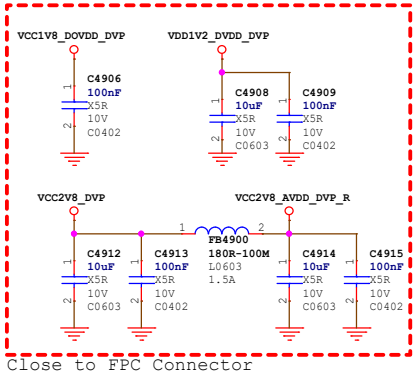

Close to FPC Connector

Front Camera:MIPI_CSI_RX 2Lanes

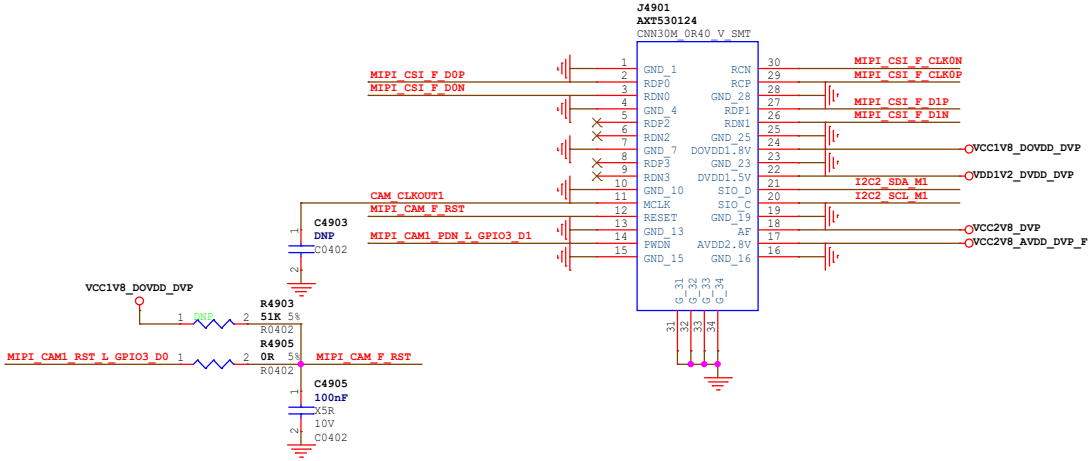

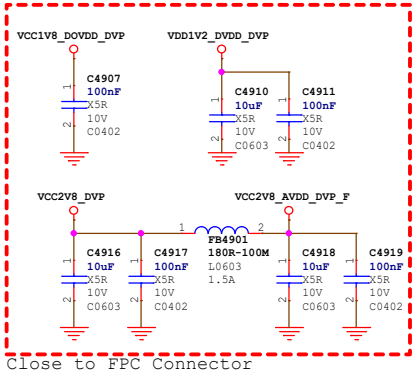

Close to FPC Connector

Rockchip Confidential

Rockchip 瑞芯微电子	Rockchip Electronics Co., Ltd				
Project:	RK3568_Tablet_REF_SCH				
File:	49.VI-Camera_MIPI_CSI_4or2Lanes				
Date:	Wednesday, September 27, 2023			Rev:	V2.0
Designed by:	Zhangdz	Reviewed by:	Default	Sheet:	39 of 62

HDMI2.0 TX

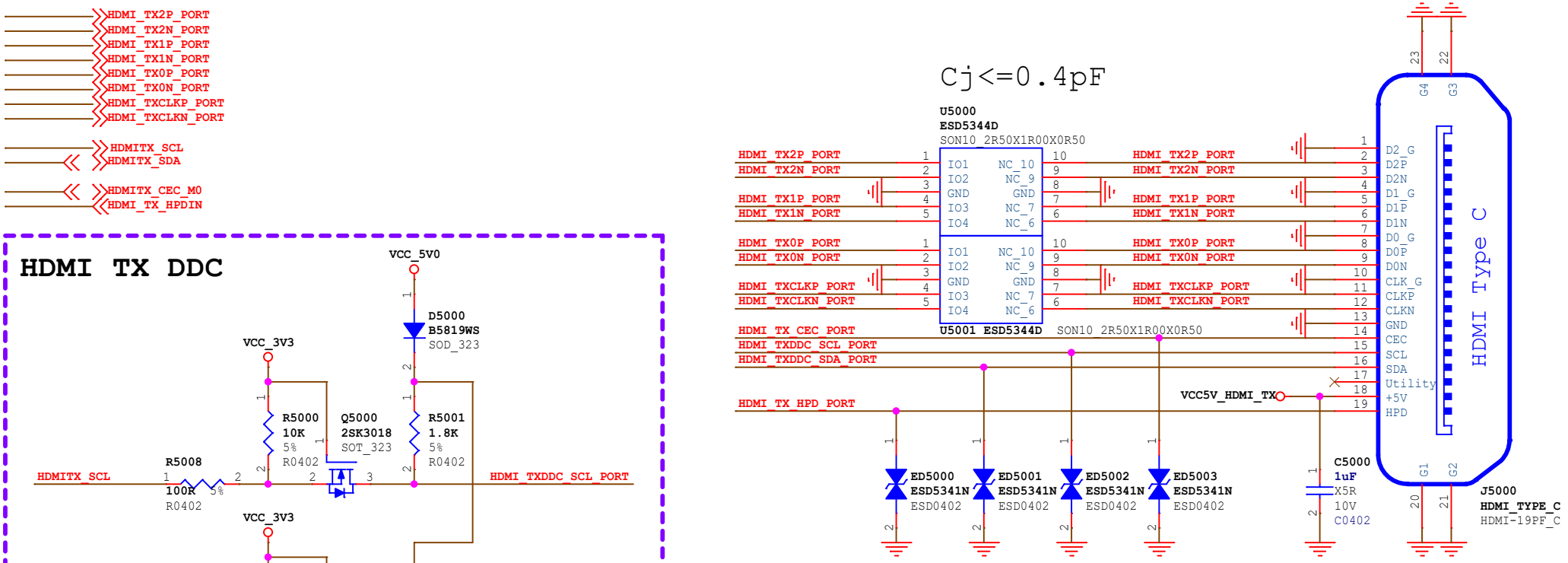

HDMI TX DDC

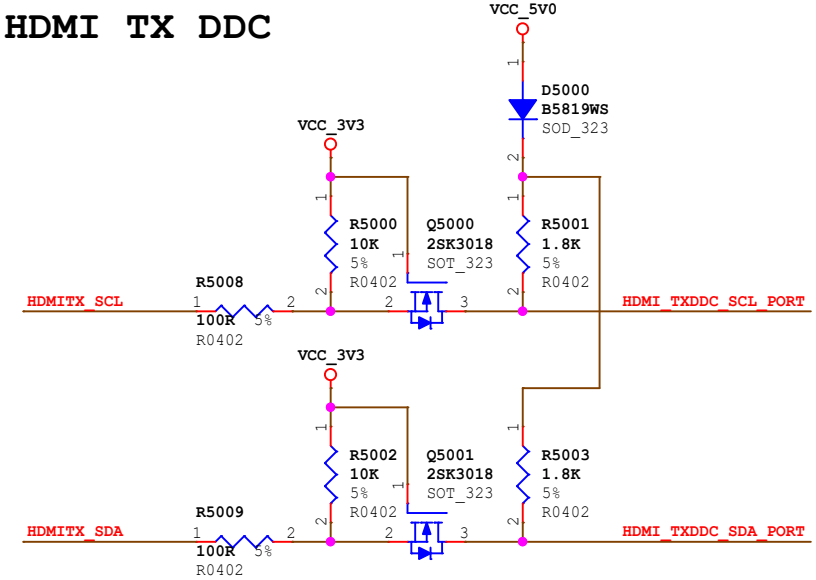

Note:

This reference circuit use TYPE C by default
If the project needs TYPE A, you must replace the library with TYPE A.

HDMI TX CEC

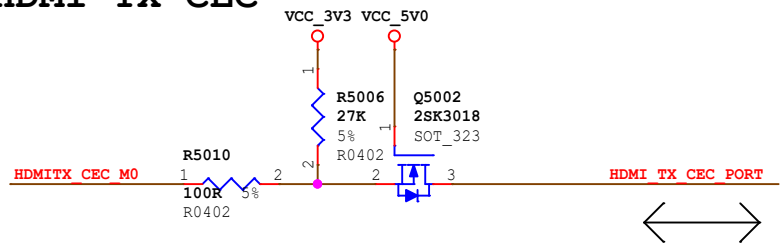

HDMI TX HPD

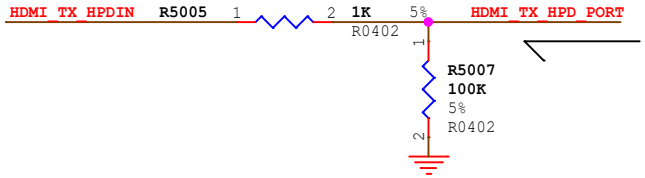

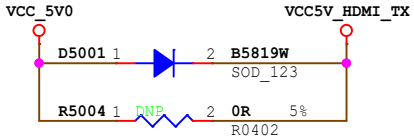

Rockchip Confidential

Rockchip 瑞芯微电子	Rockchip Electronics Co., Ltd				
Project:	RK3568_Tablet_REF_SCH				
File:	50.VO-HDMI2.0 TX				
Date:	Wednesday, September 27, 2023			Rev:	V2.0
Designed by:	Zhangdz	Reviewed by:	Default	Sheet:	40 of 62

Single-MIPI LCM:Default MIPI DSI TX0

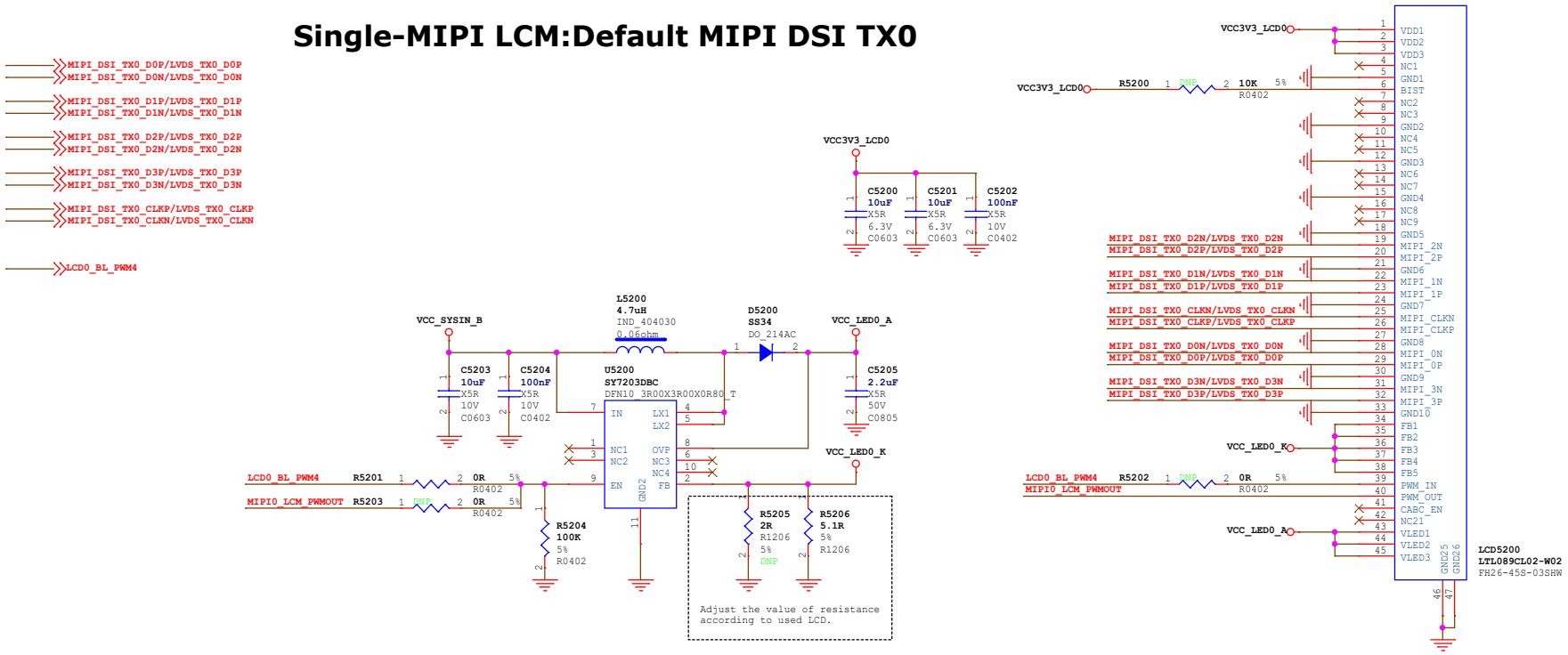

Single-MIPI LCM:Option MIPI DSI TX1

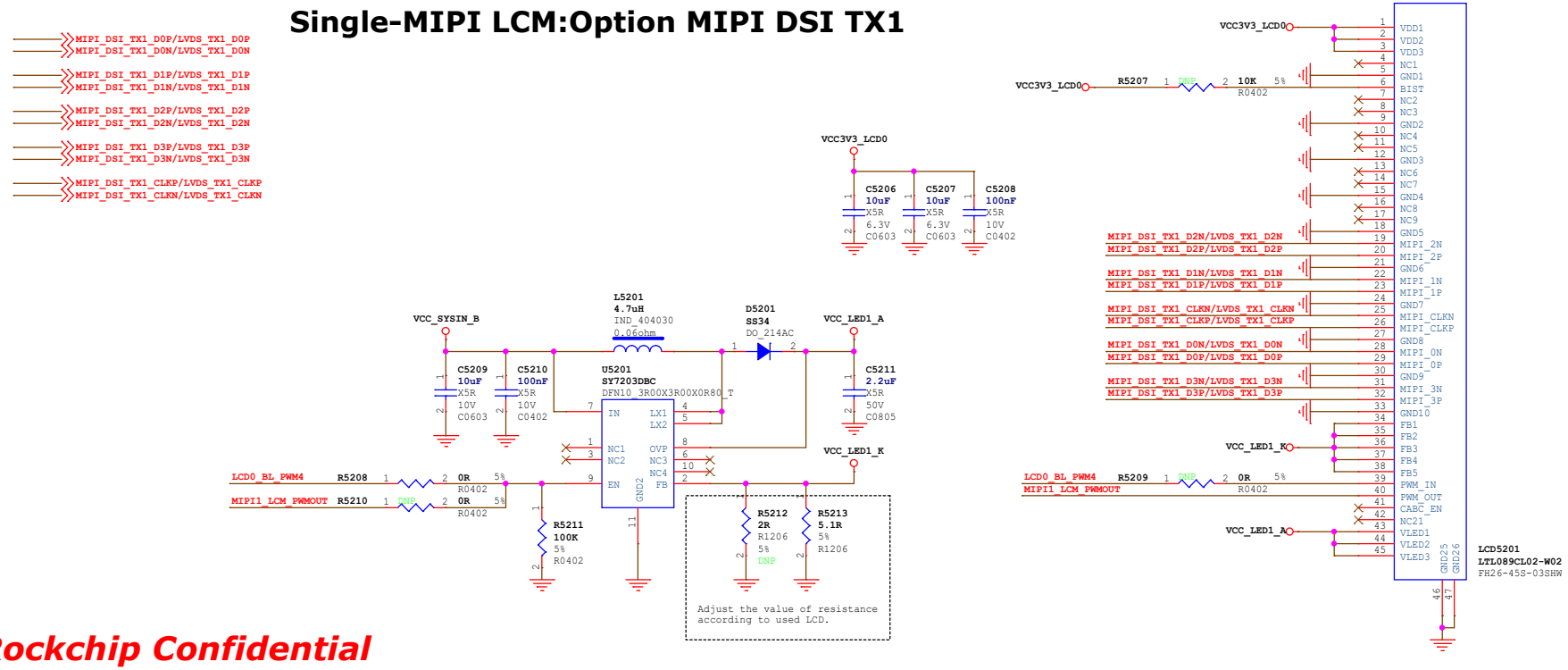

Rockchip Confidential

Rockchip 瑞芯微电子	Rockchip Electronics Co., Ltd				
Project:	RK3568_Tablet_REF_SCH				
File:	52.VO-LCM_Single MIPI _DSI TX				
Date:	Wednesday, September 27, 2023			Rev:	V2.0
Designed by:	Zhangdz	Reviewed by:	Default	Sheet:	41 of 62

Dual-MIPI LCM

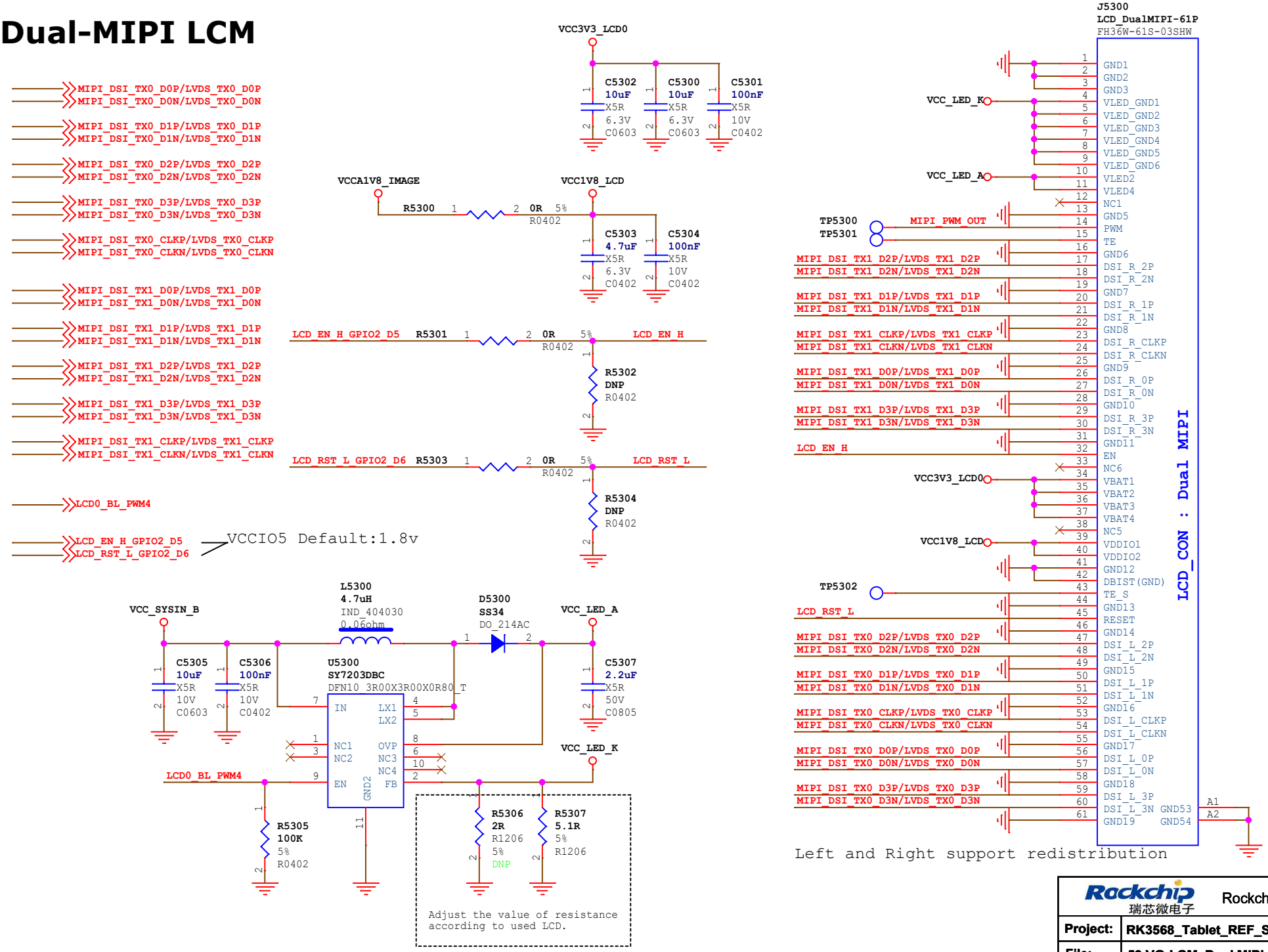

Rockchip Confidential

Rockchip 瑞芯微电子	Rockchip Electronics Co., Ltd				
Project:	RK3568_Tablet_REF_SCH				
File:	53.VO-LCM_Dual MIPI_DSI TX				
Date:	Wednesday, September 27, 2023			Rev:	V2.0
Designed by:	Zhangdz	Reviewed by:	Default	Sheet:	42 of 62

Single-LVDSLCM:Default LVDS TX0

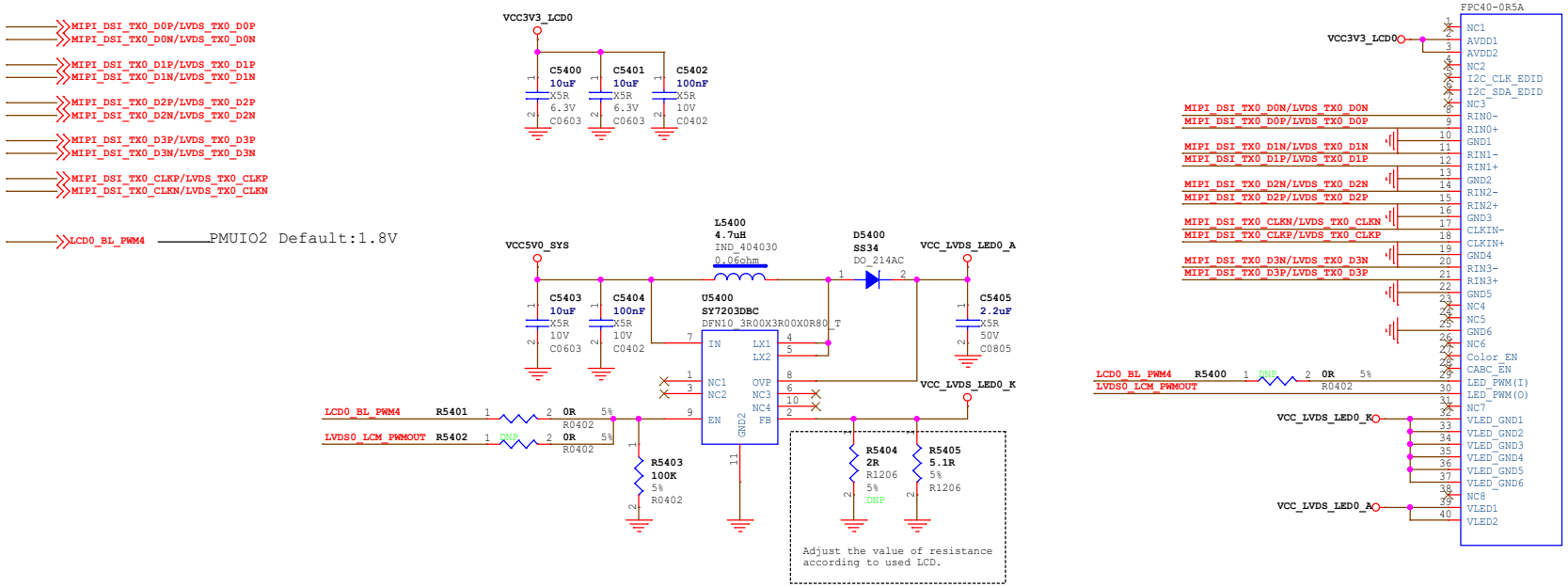

Single-LVDS LCM:Option LVDS TX1

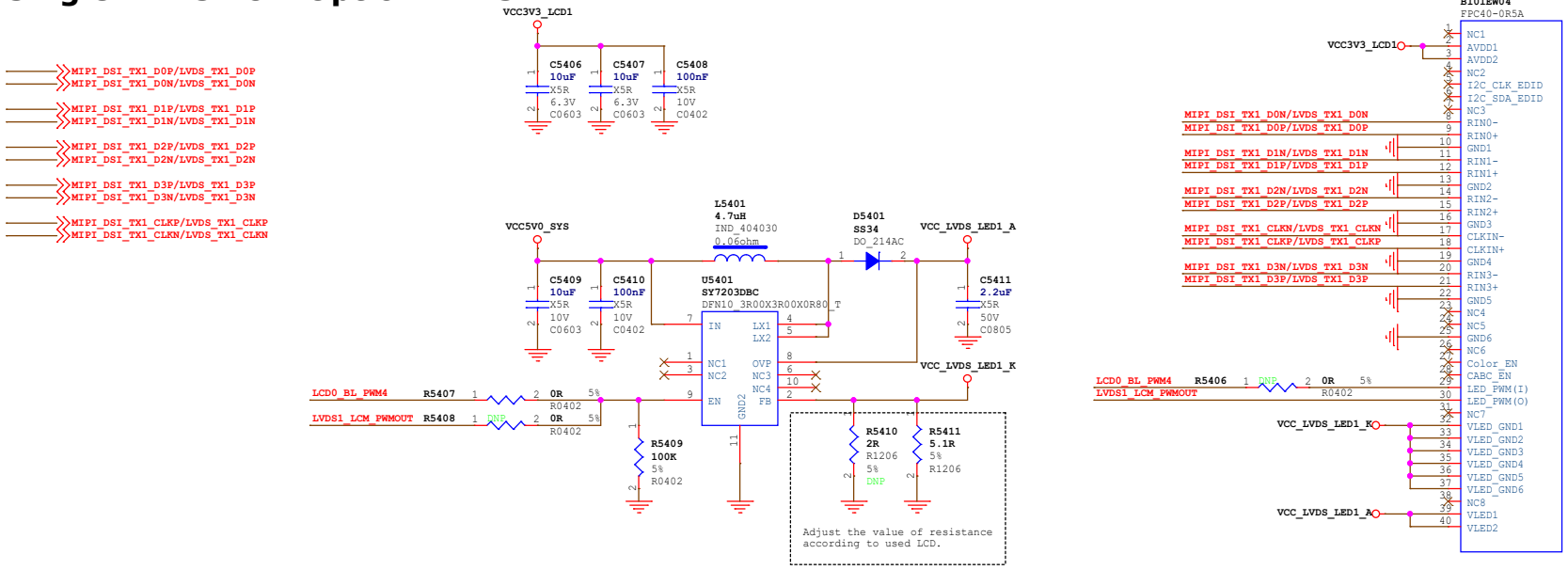

Rockchip Confidential

Rockchip 瑞芯微电子	Rockchip Electronics Co., Ltd				
Project:	RK3568_Tablet_REF_SCH				
File:	54.VO-LCM_LVDS TX0/TX1				
Date:	Wednesday, September 27, 2023			Rev:	V2.0
Designed by:	Zhangdz	Reviewed by:		Sheet:	43 of 62

Dual-LVDS LCM

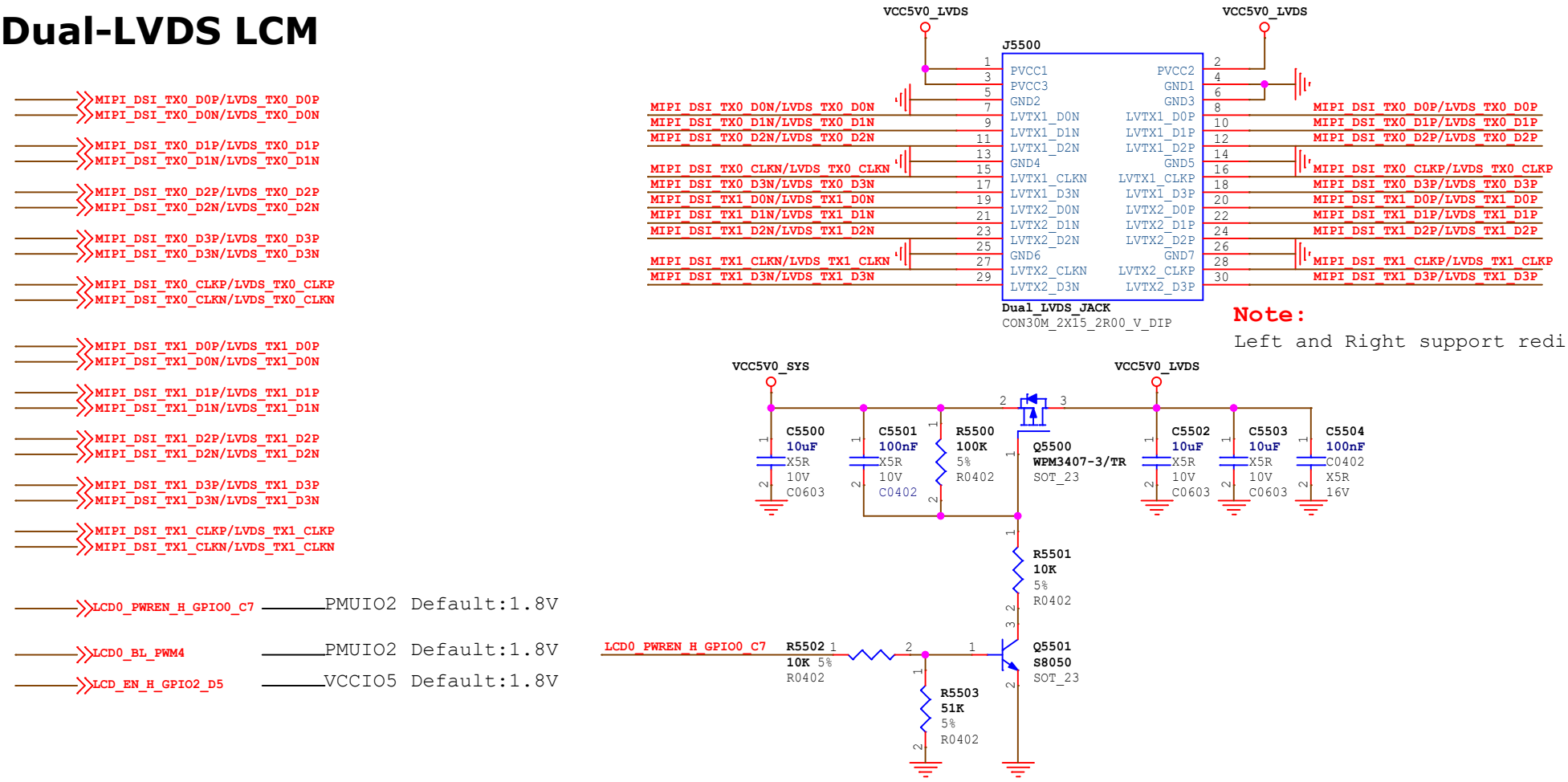

Dual LVDS Backlight

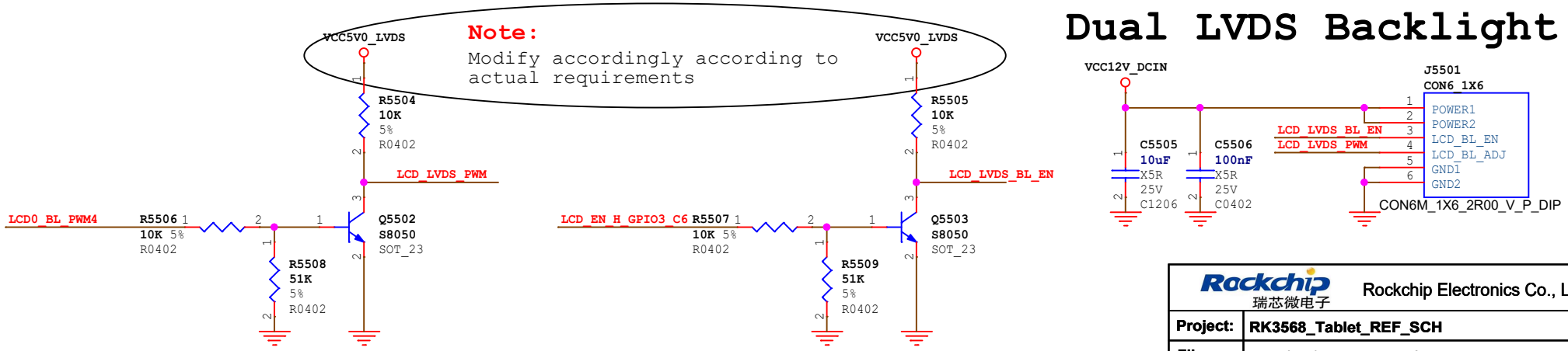

Rockchip Confidential

Rockchip 瑞芯微电子	Rockchip Electronics Co., Ltd		
Project:	RK3568_Tablet_REF_SCH		
File:	55.VO-LCM_Dual LVDS TX		
Date:	Wednesday, September 27, 2023	Rev:	V2.0
Designed by: Zhangdz	Reviewed by:	Sheet:	44 of 62

Single-eDP LCM

Note:

For EDP displays with edp1.2a or above, the bias resistors R5600 and R5601 of aux are not mounted.

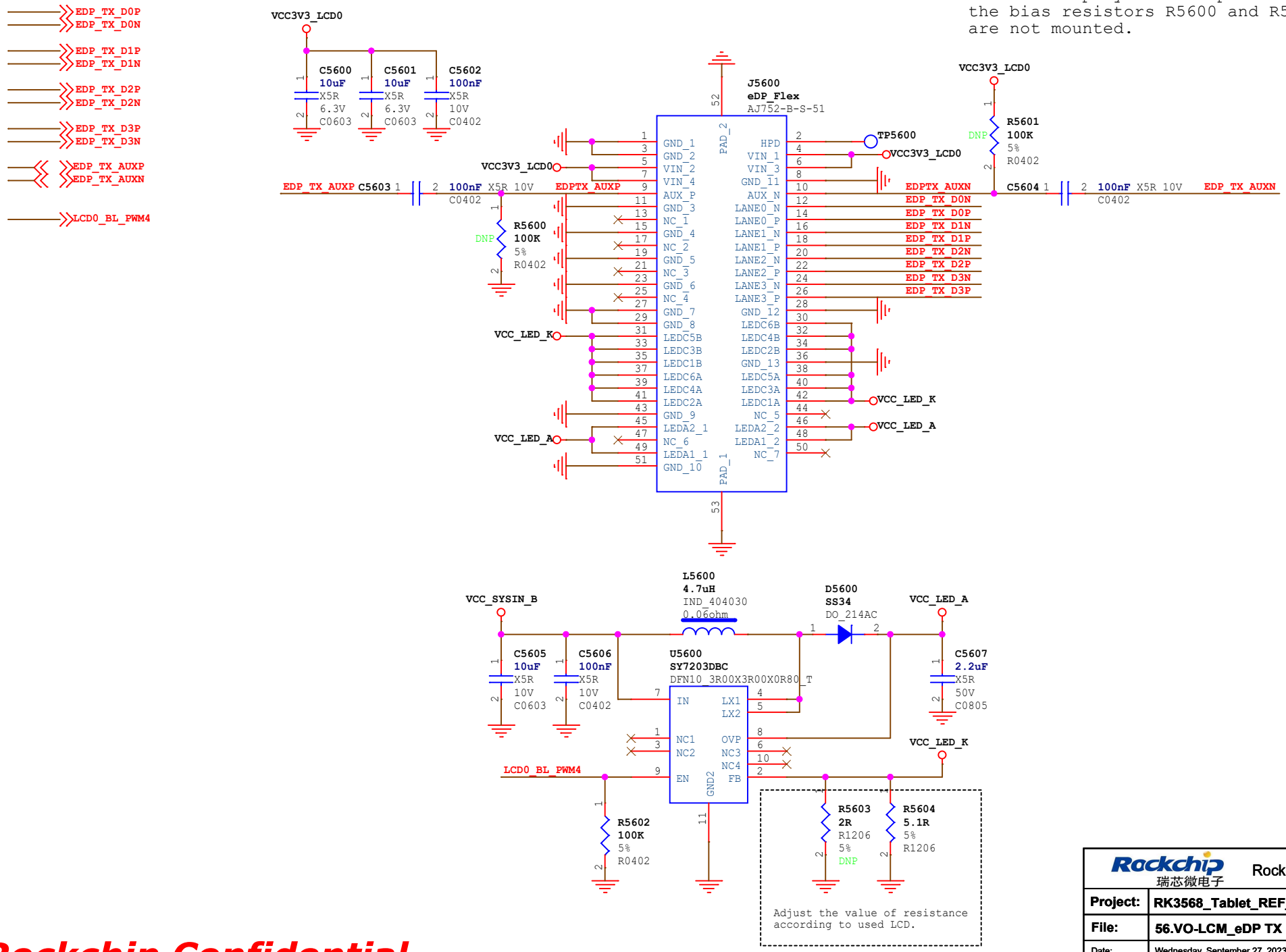

Rockchip 瑞芯微电子	Rockchip Electronics Co., Ltd		
Project:	RK3568_Tablet_REF_SCH		
File:	56.VO-LCM_eDP TX		
Date:	Wednesday, September 27, 2023	Rev:	V2.0
Designed by: Zhangdz	Reviewed by: Default	Sheet:	45 of 62

Rockchip Confidential

Touch Panel connector

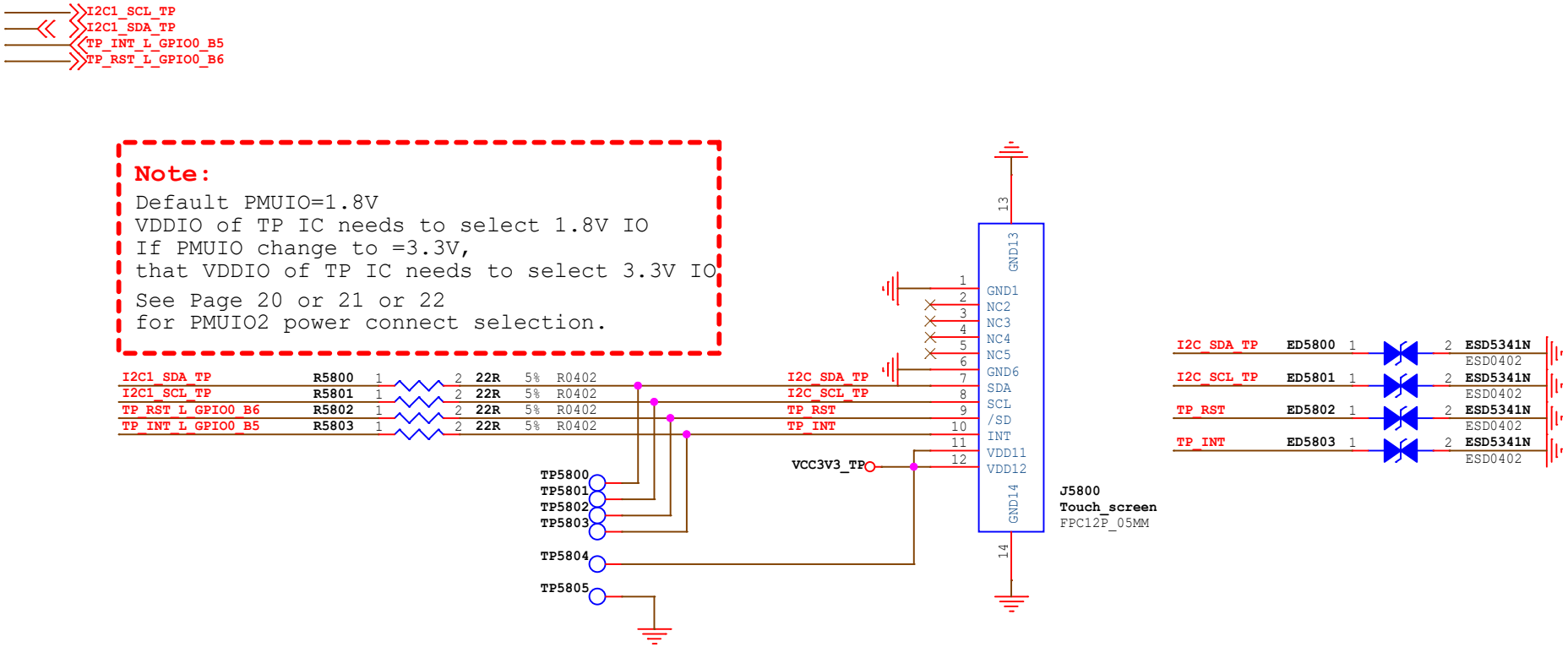

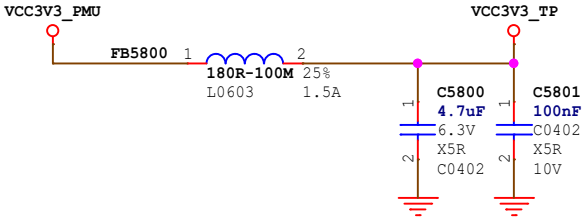

Note:

Support touch to wake-up under sleep mode.
Please note that in this usage, the TP module will increase the standby current.
If touch wake-up is not needed, you can move this circuits to the power domain of VCC_3V3.

Rockchip Confidential

Rockchip 瑞芯微电子	Rockchip Electronics Co., Ltd				
Project:	RK3568_Tablet_REF_SCH				
File:	58.TP Connector_COF				
Date:	Wednesday, September 27, 2023			Rev:	V2.0
Designed by:	Zhangdz	Reviewed by:	Default	Sheet:	46 of 62

TP COB Connector

Note:26x14 channel,
suit for Touch Panel size≤12''

Note:

Support touch to wake-up under sleep mode.
Please note that in this usage, the TP module will increase the standby current.
If touch wake-up is not needed, you can move this circuits to the power domain of VCC_3V3.

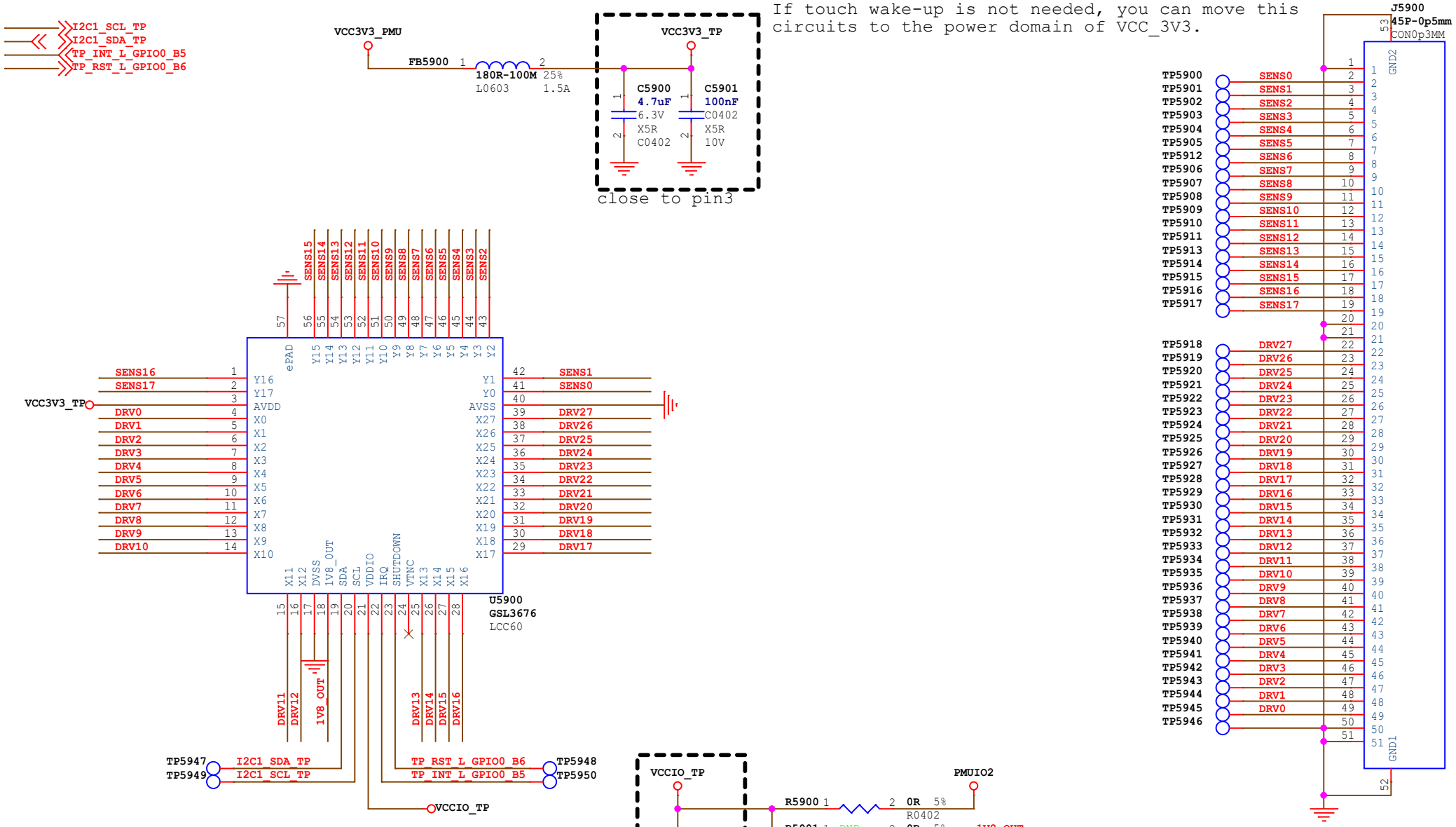

Rockchip Confidential

Rockchip 瑞芯微电子	Rockchip Electronics Co., Ltd				
Project:	RK3568_Tablet_REF_SCH				
File:	59.TP_Connector-COB				
Date:	Wednesday, September 27, 2023			Rev:	V2.0
Designed by:	Zhangdz	Reviewed by:	Default	Sheet:	47 of 62

SDIO WIFI/BT MODULE

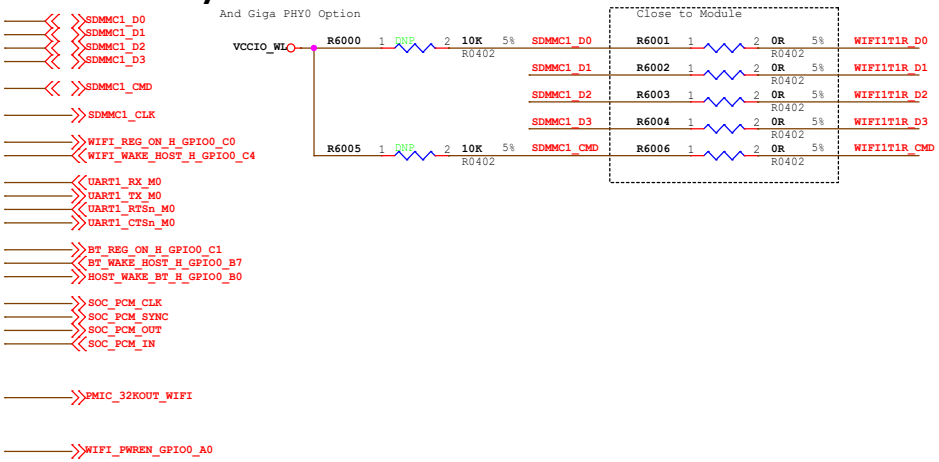

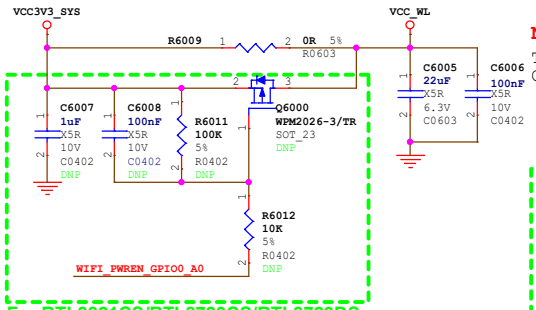

For RTL8821CS/RTL8723CS/RTL8723DS

Note:
The maximum peak current is 600mA
Close to WIFI module

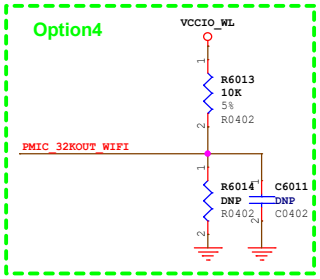

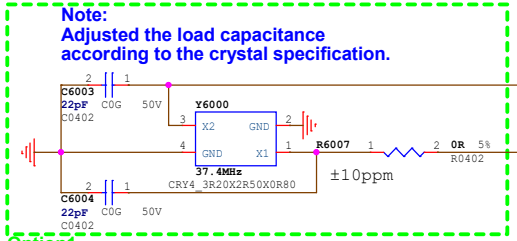

50 Ohm RF trace

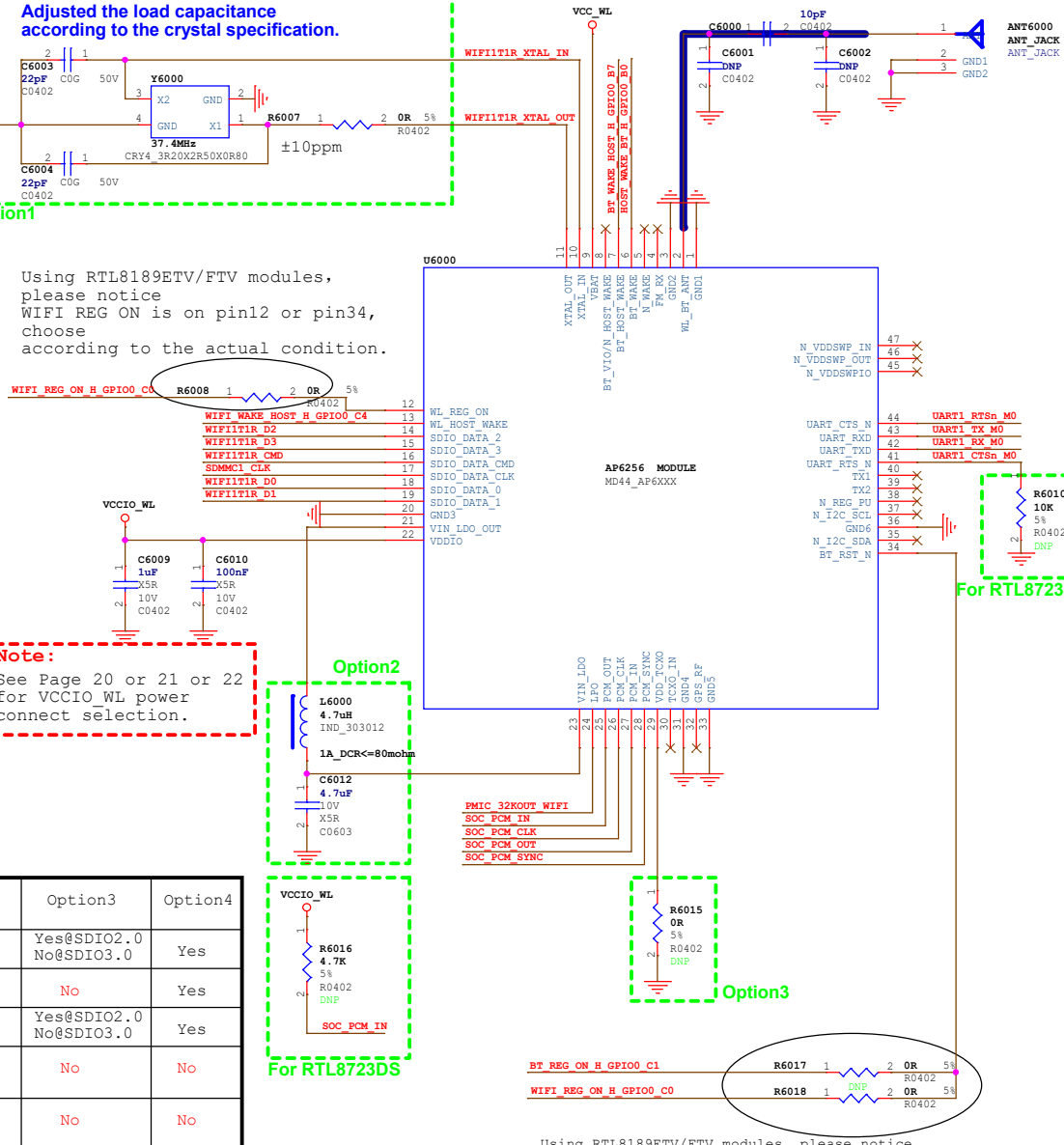

OPTION	WIFI				BT	Crystals	VDDIO	Option1	Option2	Option3	Option4
	a	b/g/n	ac	5GHz							
AW-CM256SM	Yes	Yes	Yes	Yes	4.2	37.4MHz	1.71-3.6V	Yes	Yes	Yes@SDIO2.0 No@SDIO3.0	Yes
AP6236/AP6212	No	Yes	No	No	4.2/4.0	26MHz	1.71-3.6V	Yes	Yes	No	Yes
AP6256/AP6255	Yes	Yes	Yes	Yes	5.0/4.2	37.4MHz	1.71-3.6V	Yes	Yes	Yes@SDIO2.0 No@SDIO3.0	Yes
RTL8189ETV Module F89FTSM12-W3	No	Yes	No	No	No	Module Integrated	1.8-3.3V	No	No	No	No
RTL8723BS Module F23BDSM23-W2	No	Yes	No	No	4.0	Module Integrated	1.62-3.6V	No	No	No	No
RTL8723DS Module 6223A-SRD	No	Yes	No	No	4.2	Module Integrated	1.62-3.6V	No	No	No	No
QCA9377 Module 8223A-SR	Yes	Yes	Yes	Yes	4.2	Module Integrated	1.7-3.45V	No	No	No	Yes
RTL8821CS Module 6221A-SRC	Yes	Yes	Yes	Yes	4.2	Module Integrated	1.7-3.45V	No	No	No	No

Note:
Yes: option circuit be mounted
No: option circuit not be mounted

Rockchip Confidential

Rockchip 瑞芯微电子	Rockchip Electronics Co., Ltd		
Project:	RK3568_Tablet_REF_SCH		
File:	60.WIFI/BT-SDMMC1_1T1R + UART		
Date:	Wednesday, September 27, 2023	Rev:	V2.0
Designed by: Zhangdz	Reviewed by: Default	Sheet:	48 of 62

SDIO WIFI/BT MODULE-2T2R

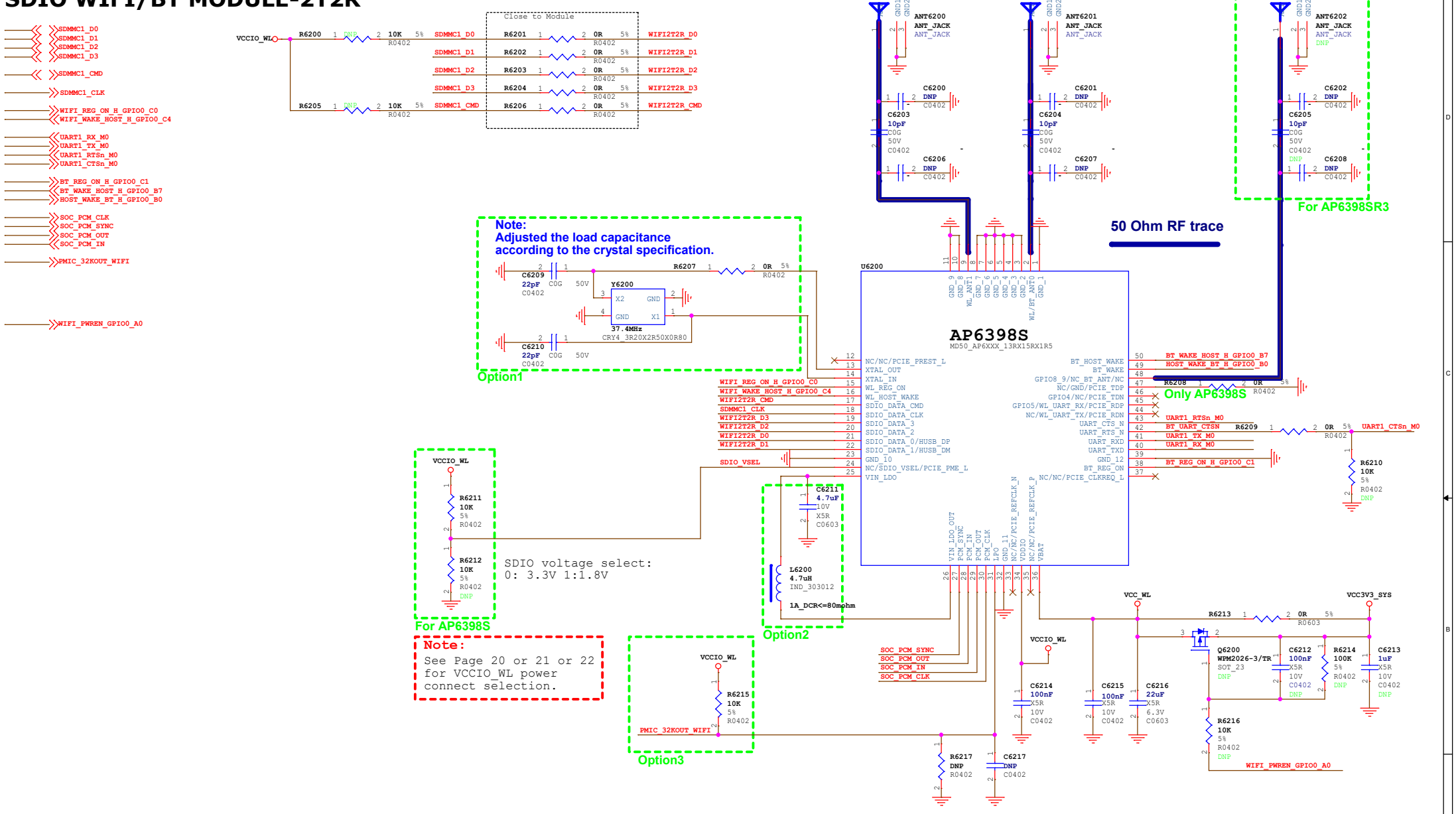

OPTION	WIFI				BT	Crystals	VDDIO	Option1	Option2	Option3
	a	b/g/n	ac	5GHz						
AP6398S	Yes	Yes	Yes	Yes	5.0	37.4MHz	1.71-3.6V	Yes	Yes	Yes
AP6356S	Yes	Yes	Yes	Yes	4.1	37.4MHz	1.71-3.6V	Yes	Yes	Yes
RTL8822BS Module	Yes	Yes	Yes	Yes	4.1	Module Integrated	1.71-3.6V	No	No	No

Note:
Yes: option circuit be mounted
No: option circuit not be mounted

Rockchip Confidential

Rockchip 瑞芯微电子	Rockchip Electronics Co., Ltd		
Project:	RK3568_Tablet_REF_SCH		
File:	62.WIFI/BT-SDMMC1_2T2R + UART		
Date:	Wednesday, September 27, 2023	Rev:	V2.0
Designed by: Zhangdz	Reviewed by: Default	Sheet:	49 of 62

PCIe WIFI6/BT MODULE-2T2R

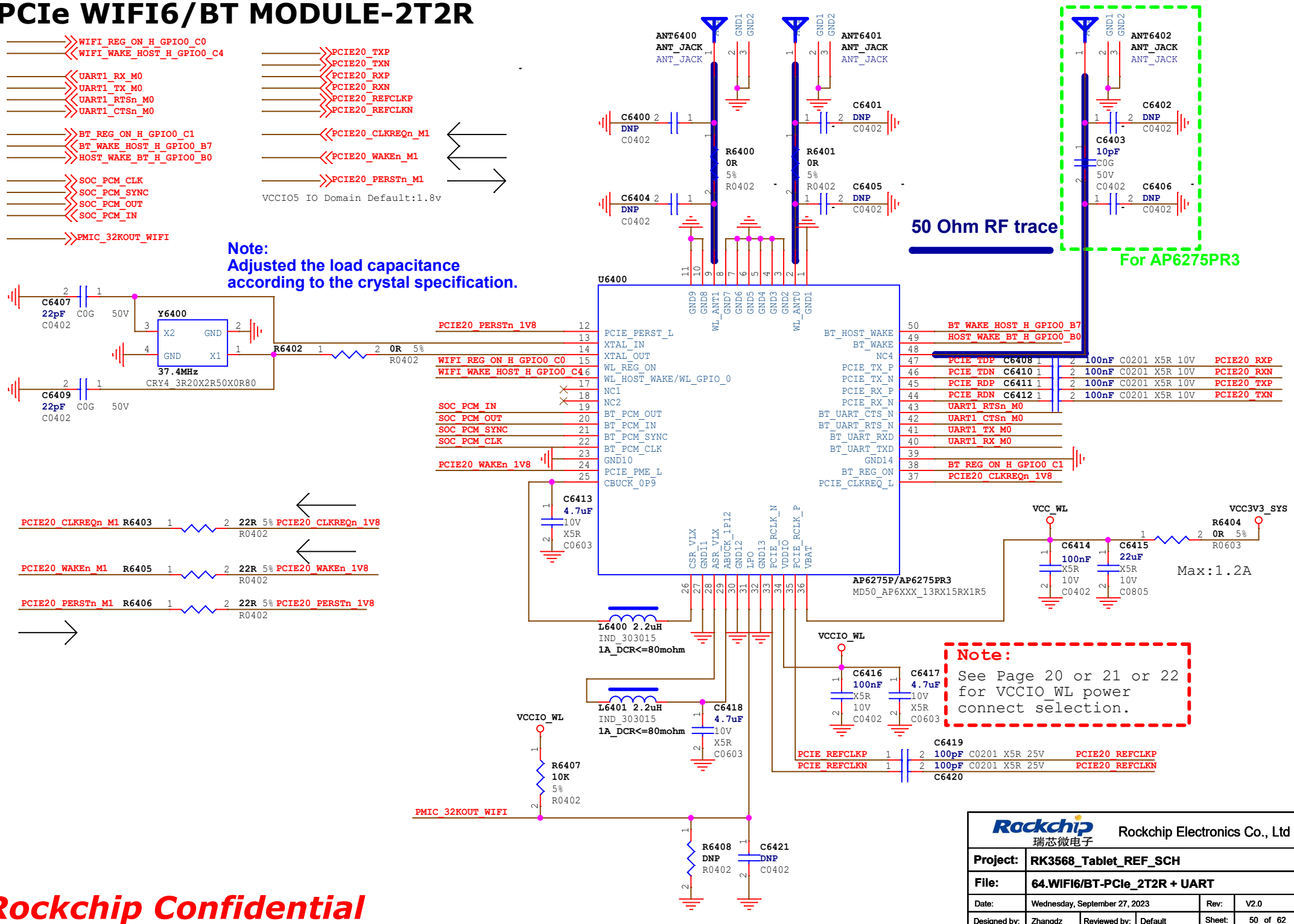

Rockchip Confidential

Rockchip 瑞芯微电子	Rockchip Electronics Co., Ltd				
Project:	RK3568_Tablet_REF_SCH				
File:	64.WIFI6/BT-PCIe_2T2R + UART				
Date:	Wednesday, September 27, 2023			Rev:	V2.0
Designed by:	Zhangdz	Reviewed by:	Default	Sheet:	50 of 62

WIFI/BT-M.2_KEY_E

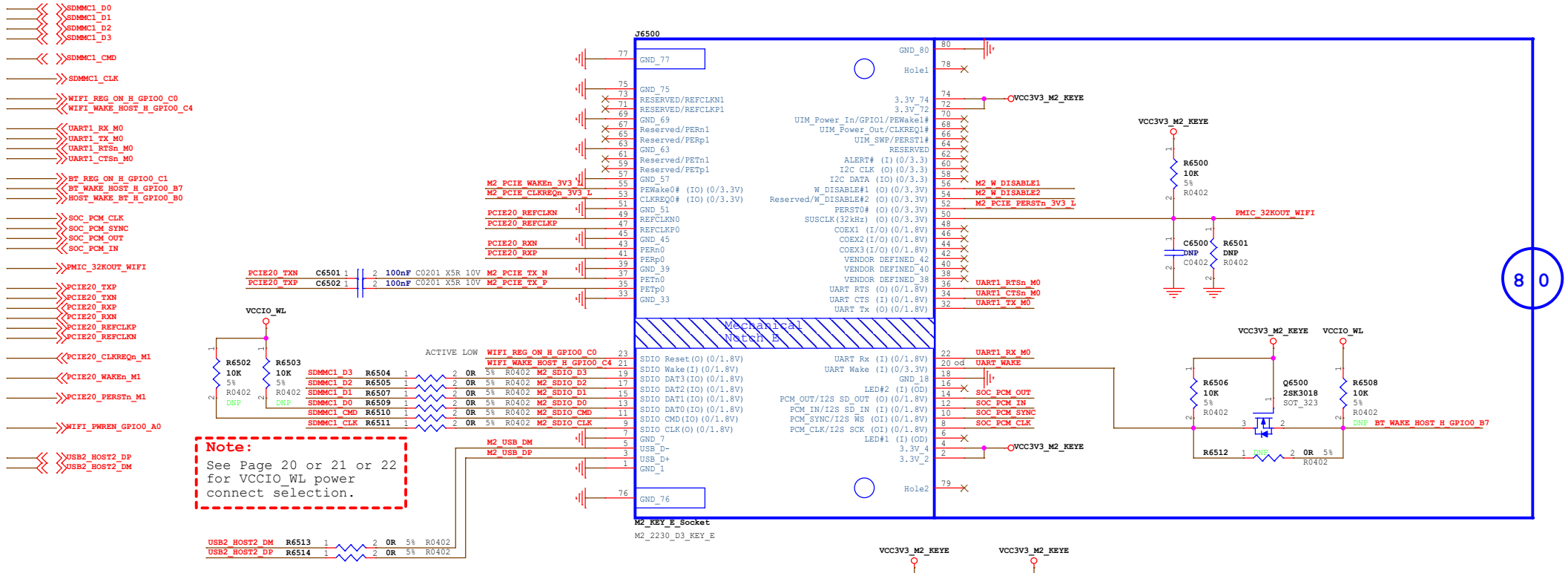

Rockchip 瑞芯微电子	Rockchip Electronics Co., Ltd		
Project:	RK3568_Tablet_REF_SCH		
File:	65.WIFI/BT-M.2_KEY_E		
Date:	Wednesday, September 27, 2023	Rev:	V2.0
Designed by: Zhangdz	Reviewed by: Default	Sheet:	51 of 62

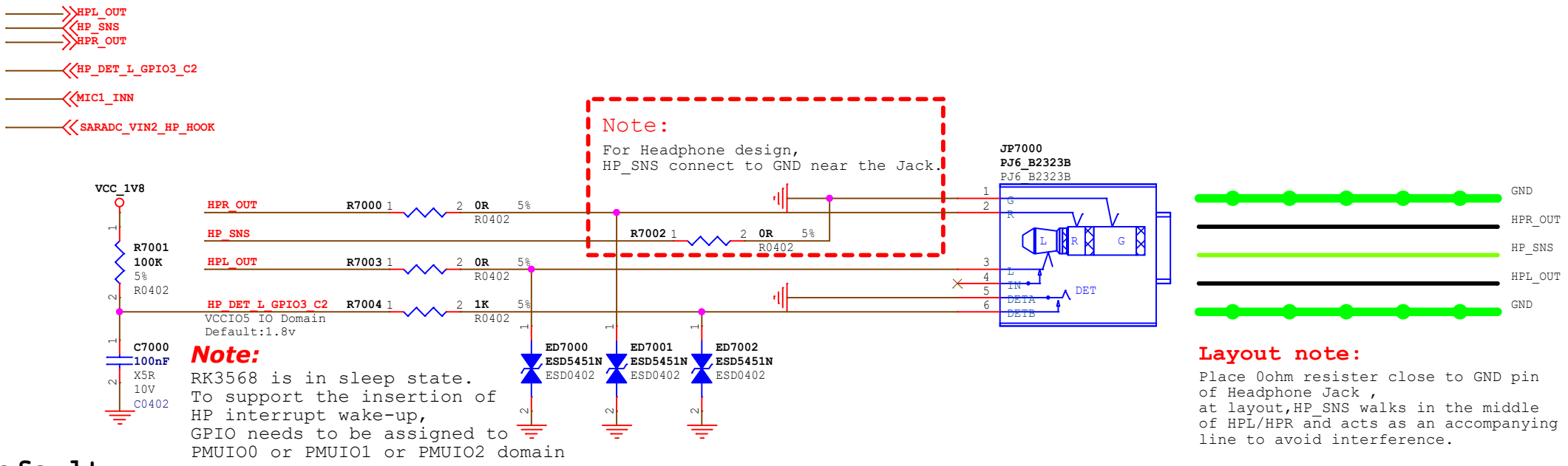

Note:
RK3568 is in sleep state.
To support the insertion of
HP interrupt wake-up,
GPIO needs to be assigned to
PMUIO0 or PMUIO1 or PMUIO2 domain

Layout note:
Place 0ohm resister close to GND pin
of Headphone Jack ,
at layout,HP_SNS walks in the middle
of HPL/HPR and acts as an accompanying
line to avoid interference.

Default

Headphone Jack(3-pole with DET)

Headphone Jack(4-pole with DET & MIC)

Option

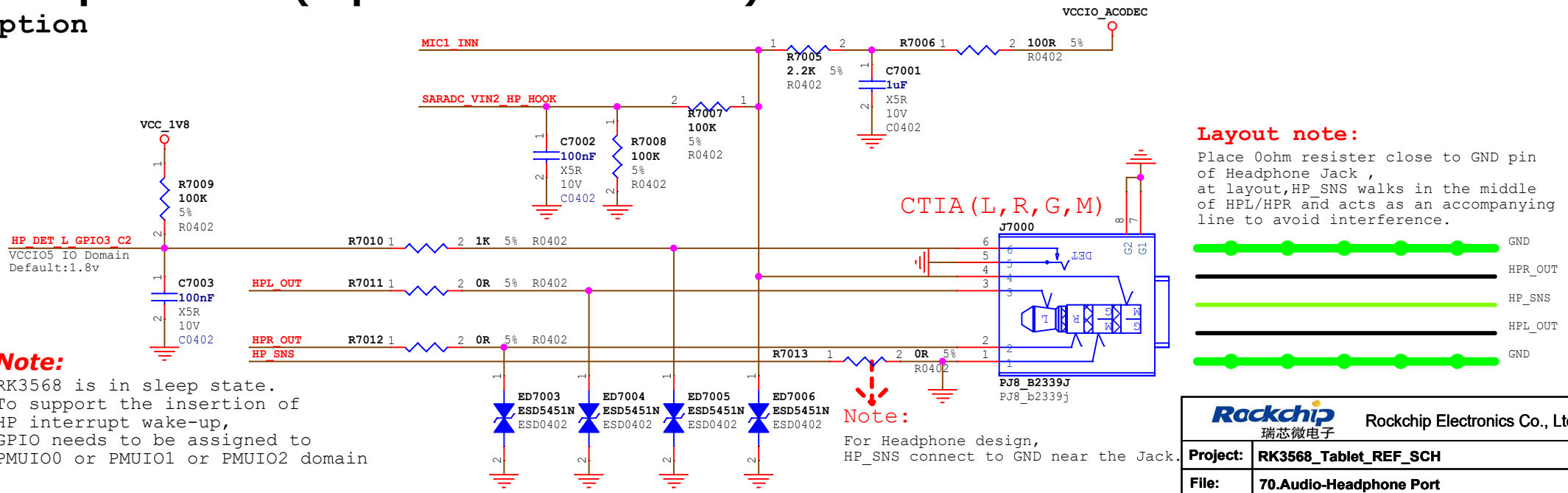

Note:
RK3568 is in sleep state.
To support the insertion of
HP interrupt wake-up,
GPIO needs to be assigned to
PMUIO0 or PMUIO1 or PMUIO2 domain

Layout note:
Place 0ohm resister close to GND pin
of Headphone Jack ,
at layout,HP_SNS walks in the middle
of HPL/HPR and acts as an accompanying
line to avoid interference.

Rockchip Confidential

Rockchip 瑞芯微电子	Rockchip Electronics Co., Ltd				
Project:	RK3568_Tablet_REF_SCH				
File:	70.Audio-Headphone Port				
Date:	Wednesday, September 27, 2023			Rev:	V2.0
Designed by:	Zhangdz	Reviewed by:	Default	Sheet:	52 of 62

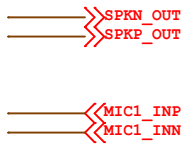

Default
MIC for 3-pole Headphone Jack

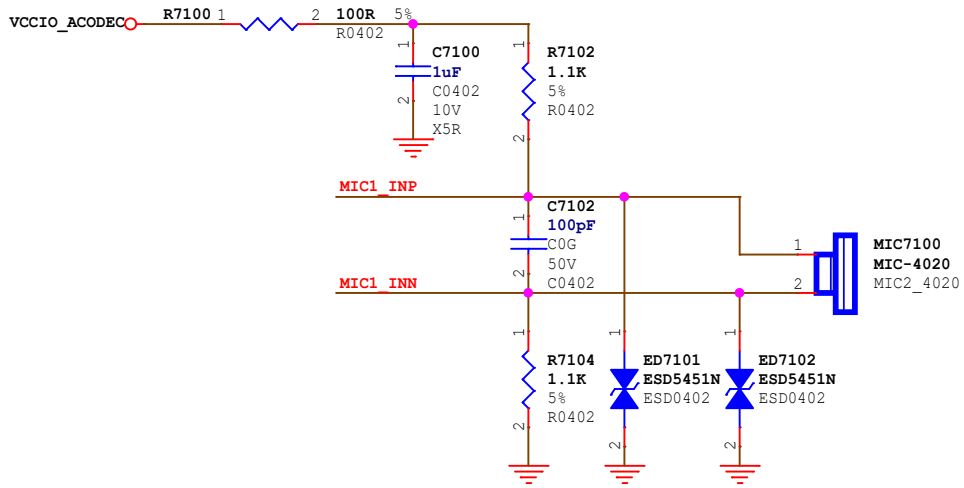

Option
MIC for 4-pole Headphone Jack

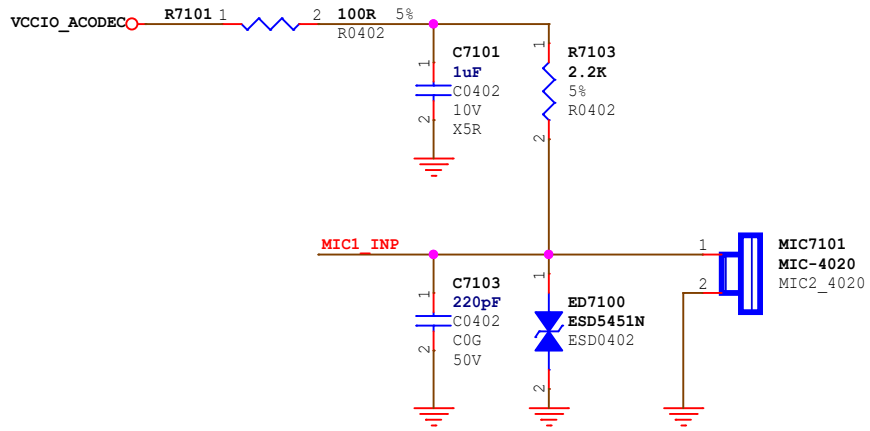

SPK

Note:8ohm/1.3W
Speaker Output

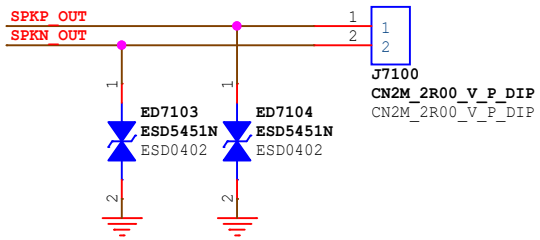

Rockchip Confidential

Rockchip 瑞芯微电子	Rockchip Electronics Co., Ltd				
Project:	RK3568_Tablet_REF_SCH				
File:	71.Audio-SingleMic+RK809_SPK				
Date:	Wednesday, September 27, 2023			Rev:	V2.0
Designed by:	Zhangdz	Reviewed by:	Default	Sheet:	53 of 62

MicArray

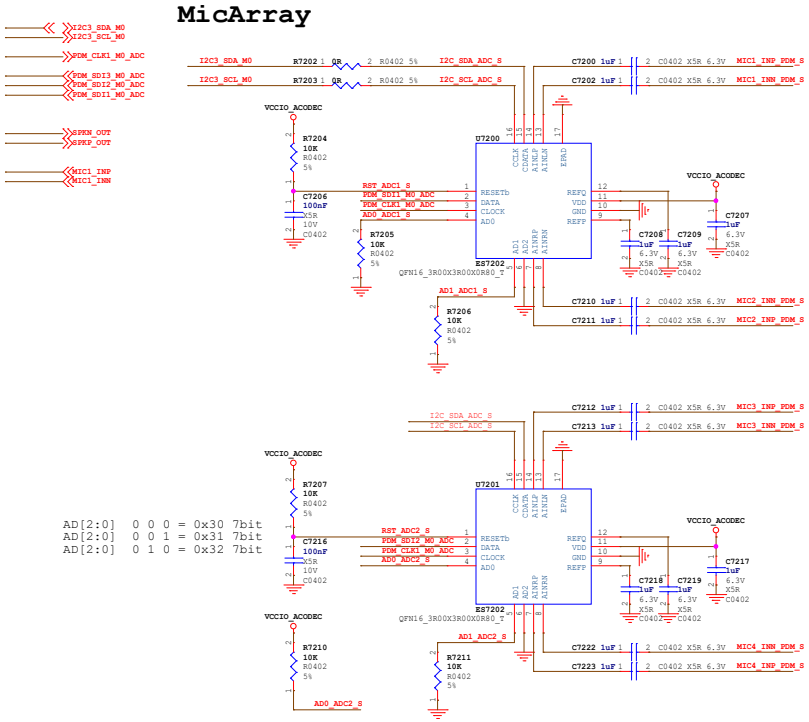

AD[2:0] 0 0 0 = 0x30 7bit
AD[2:0] 0 0 1 = 0x31 7bit
AD[2:0] 0 1 0 = 0x32 7bit

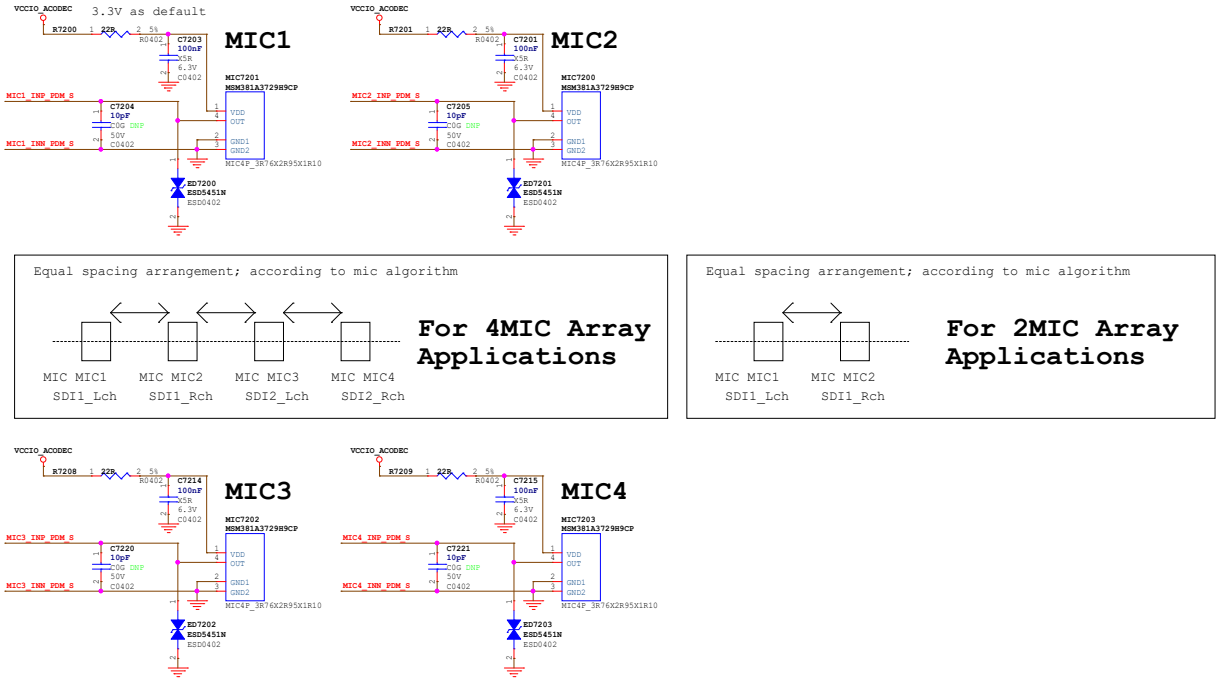

Option1

Loopback for Mono Speaker

(External ADC, better performance)

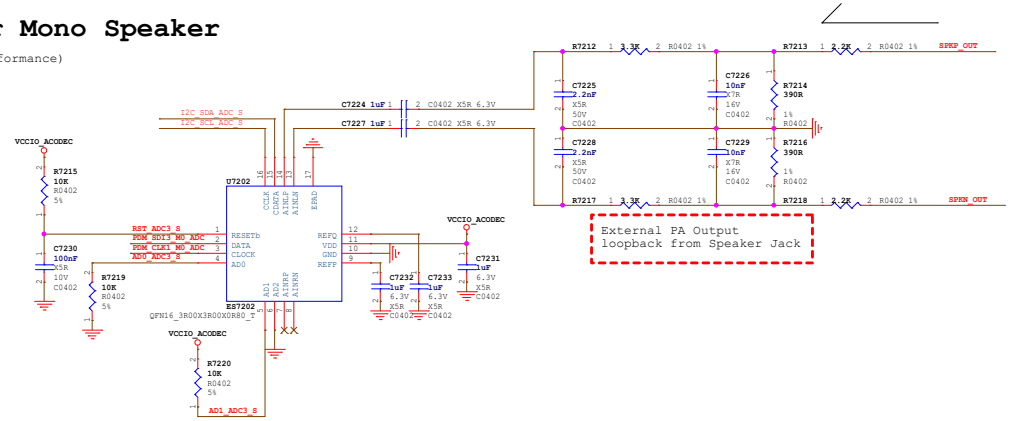

RK809-5 SPK

Note:8ohm/1.3W
Speaker Output

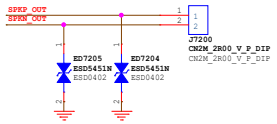

Option2

Loopback for Mono Speaker

(Available while No MIC is connected to RK809-5)
(cost-effective)

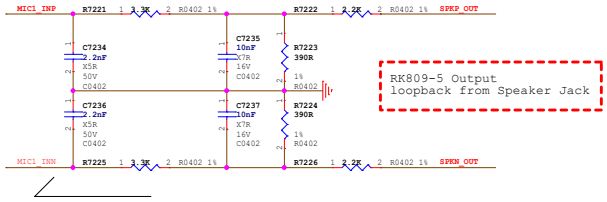

Rockchip Confidential

Rockchip 瑞芯微电子	Rockchip Electronics Co., Ltd		
Project:	RK3568_Tablet_REF_SCH		
File:	72.Audio-MicArray+RK809_SPK		
Date:	Wednesday, September 27, 2023	Rev:	V2.0
Designed by: Zhangtz	Reviewed by: Default	Sheet:	54 of 62

MicArray

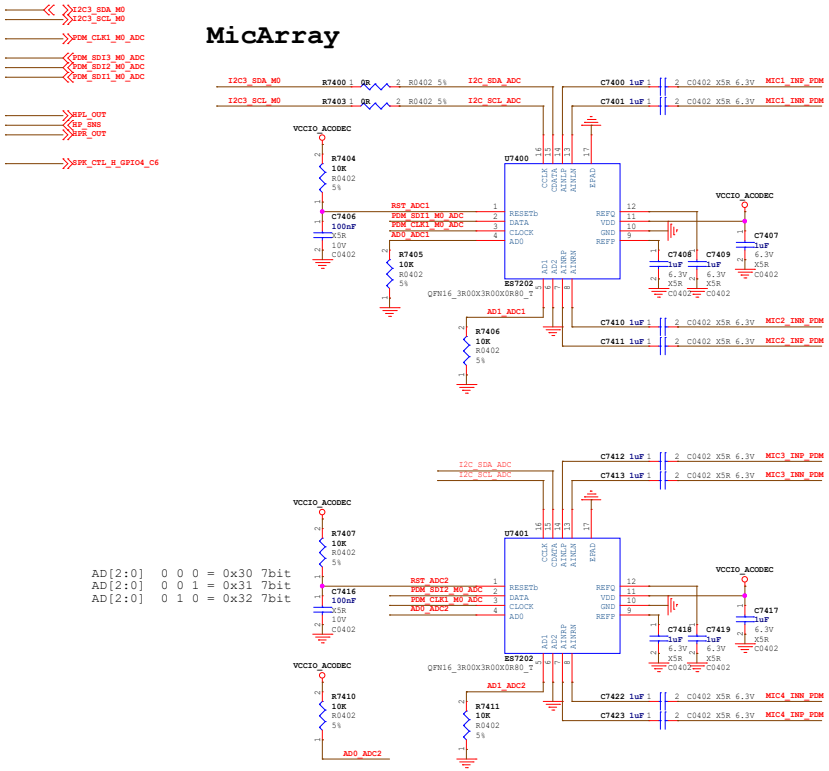

AD[2:0] 0 0 0 = 0x30 7bit
AD[2:0] 0 0 1 = 0x31 7bit
AD[2:0] 0 1 0 = 0x32 7bit

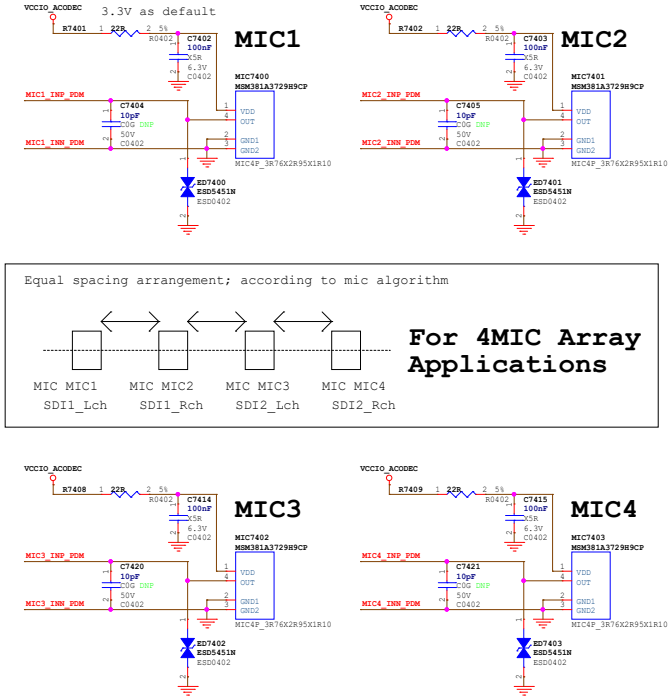

Loopback for Dual Speakers

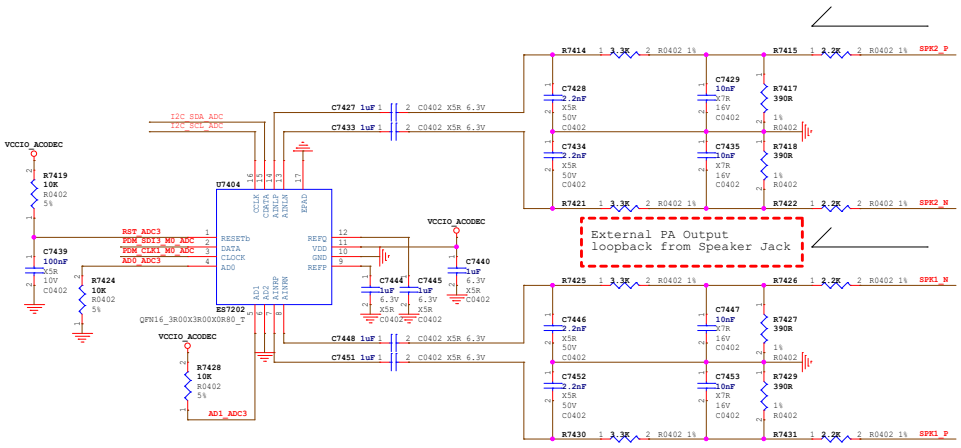

Speaker Output

Note:4ohm/3W

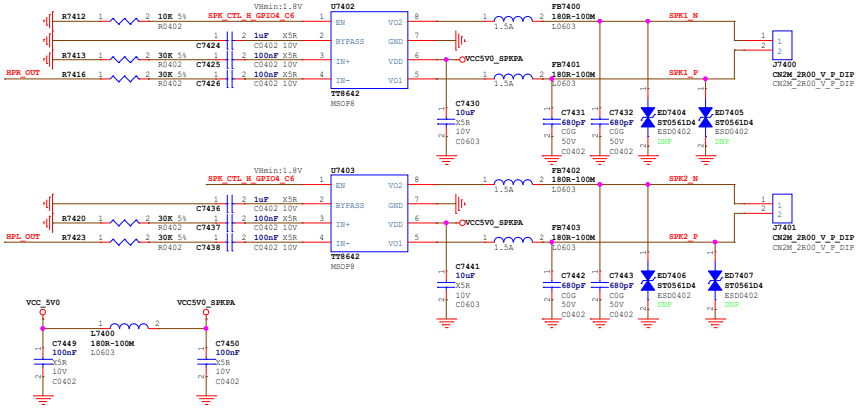

Layout note:

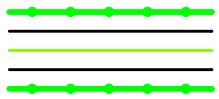

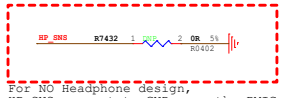

For NO Headphone design,
HP_SNS connect to GND near the PMIC.

Rockchip 瑞芯微电子	Rockchip Electronics Co., Ltd		
Project:	RK3568_Tablet_REF_SCH		
File:	74.Audio-MicArray+EXT Dual_SPK		
Date:	Wednesday, September 27, 2023	Rev:	V2.0
Designed by: Zhangtz	Reviewed by: Default	Sheet:	55 of 62

Rockchip Confidential

MiniPCIe2.0 Slot_Support 4G module

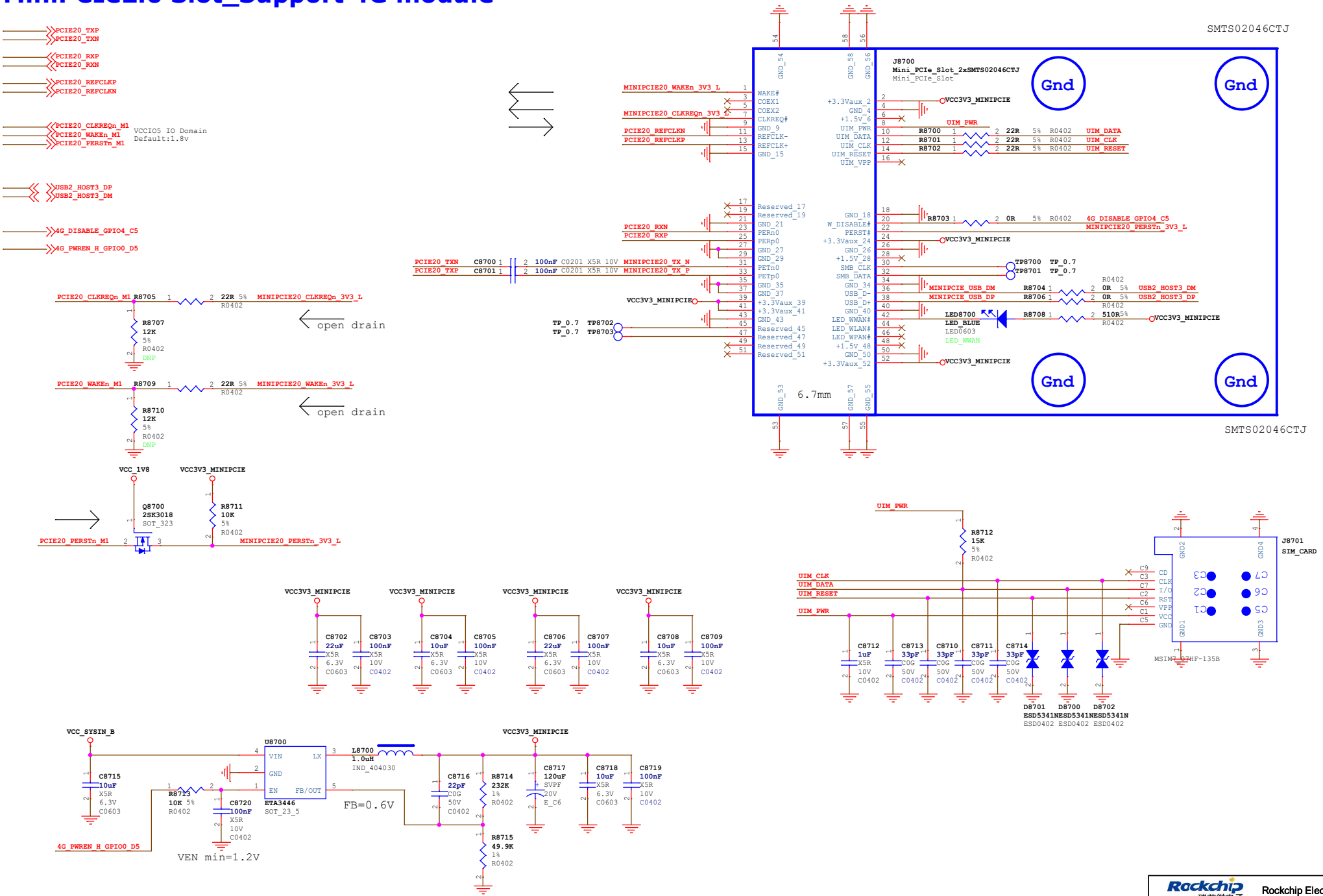

Rockchip Confidential

Rockchip 瑞芯微电子	Rockchip Electronics Co., Ltd				
Project:	RK3568_Tablet_REF_SCH				
File:	87.MiniPCIe2.0 Slot_With 4G Fun				
Date:	Wednesday, September 27, 2023			Rev:	V2.0
Designed by:	Zhangdz	Reviewed by:	Default	Sheet:	56 of 62

M.2 SSD_PCIe3.0 x 2Lanes

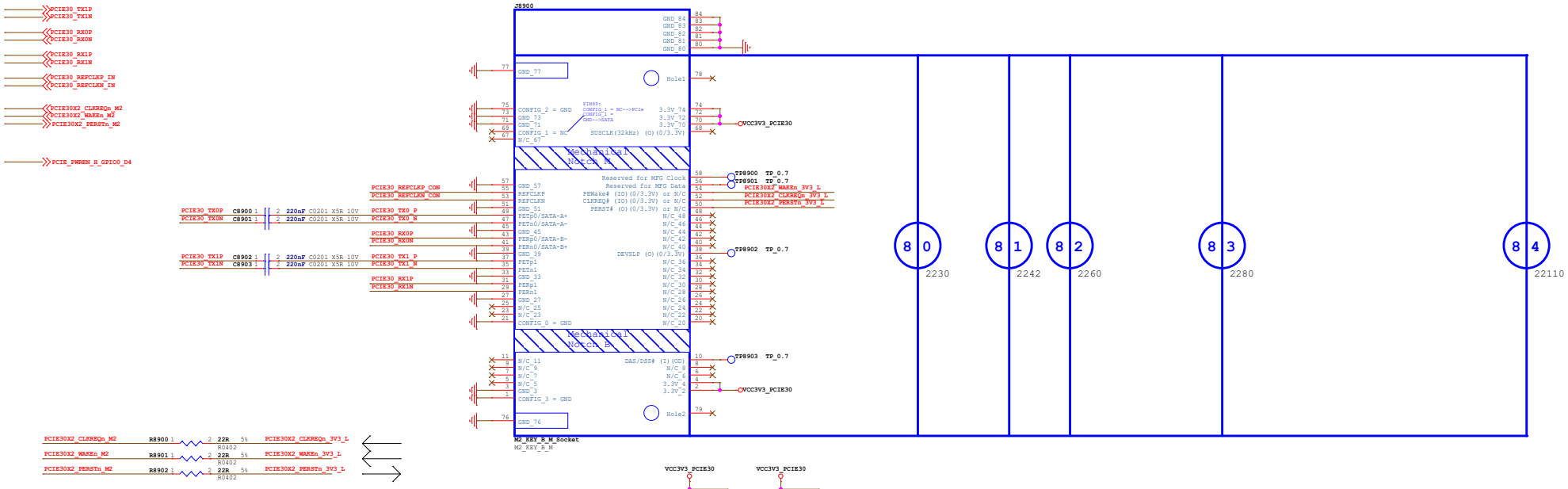

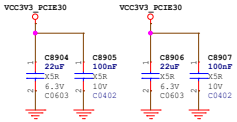

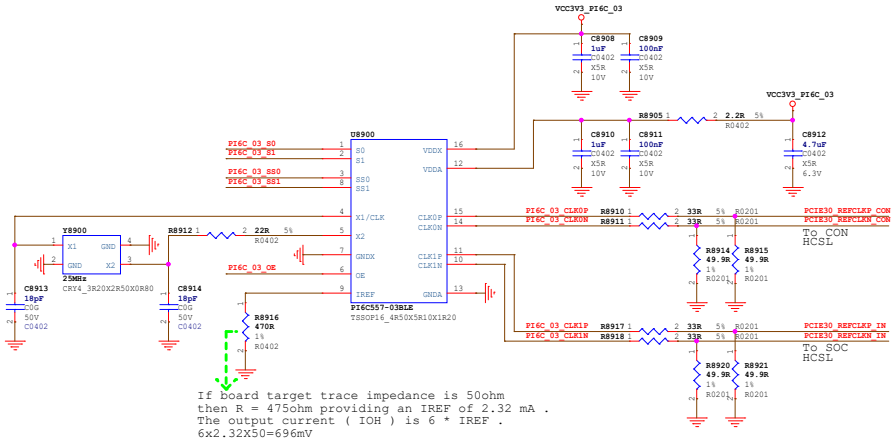

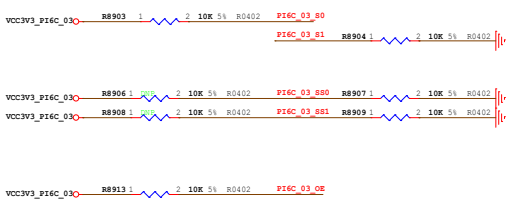

PI6C_S1	PI6C_S0	Out Freq
0	1	100MHz

PI6C_SS1	PI6C_SS0	Spread %
0	0	No Spread
0	1	-0.5
1	0	-1.0
1	1	No Spread

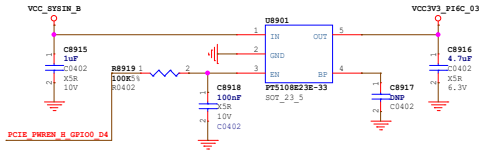

Default 3.39V

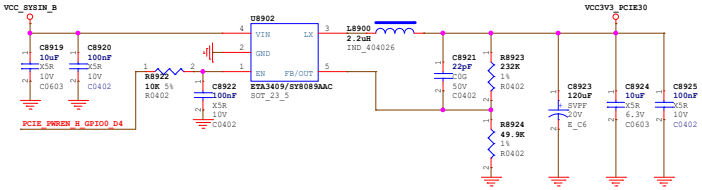

Rockchip Confidential

Rockchip 瑞芯微电子	Rockchip Electronics Co., Ltd		
Project:	RK3568_Tablet_REF_SCH		
File:	89.PCIE-M.2 SSD_KEY_B_M		
Date:	Wednesday, September 27, 2023	Rev:	V2.0
Designed by: Zhangtz	Reviewed by: Default	Sheet:	57 of 62

Sensors

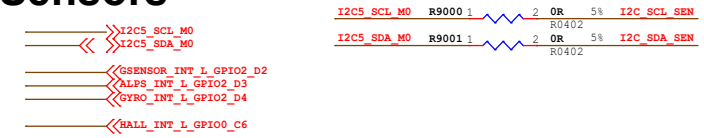

Gyroscope+Accelerometer

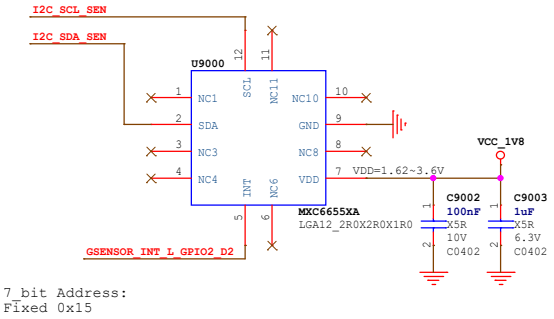

Gyroscope+Accelerometer

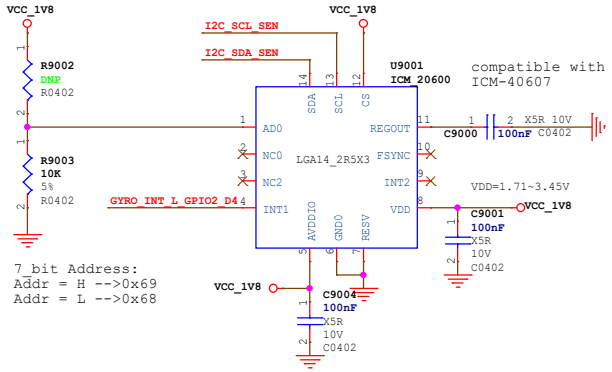

Accelerometer

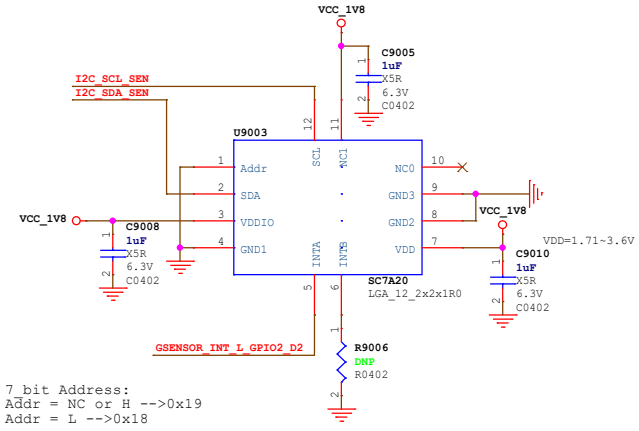

Ambient Light & Proximity Sensor

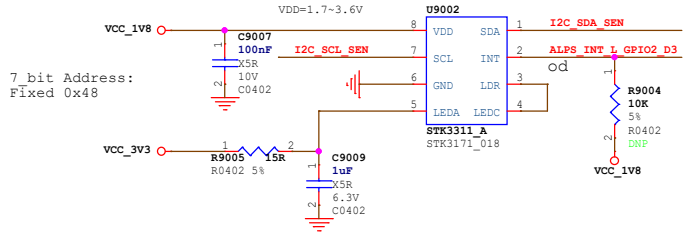

Hall-Sensor

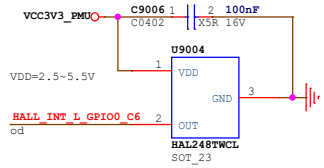

M-Sensor

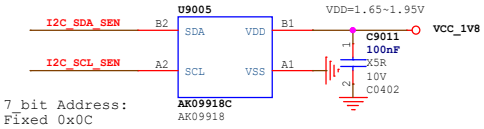

Rockchip Confidential

Rockchip 瑞芯微电子	Rockchip Electronics Co., Ltd				
Project:	RK3568_Tablet_REF_SCH				
File:	90.Sensors				
Date:	Wednesday, September 27, 2023			Rev:	V2.0
Designed by:	Zhangdz	Reviewed by:	Default	Sheet:	58 of 62

UART2_RX_M0_DEBUG
UART2_TX_M0_DEBUG

Debug UART2

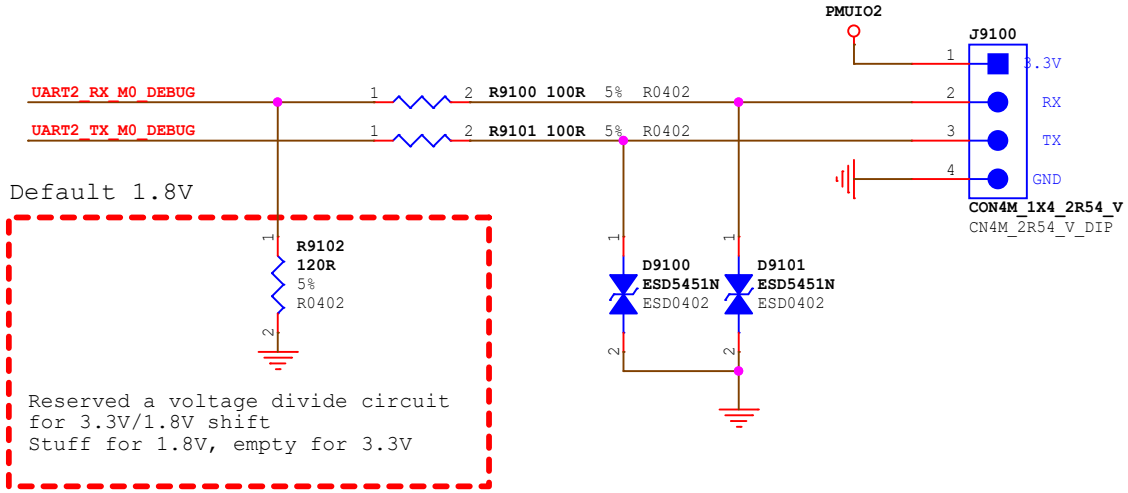

Rockchip Confidential

Rockchip 瑞芯微电子	Rockchip Electronics Co., Ltd				
Project:	RK3568_Tablet_REF_SCH				
File:	91.Debug UART				
Date:	Wednesday, September 27, 2023			Rev:	V2.0
Designed by:	Zhangdz	Reviewed by:	Default	Sheet:	59 of 62

Key Array

SARADC_VIN0_KEY/RECOVERY

RESETn

PMIC_PWRON

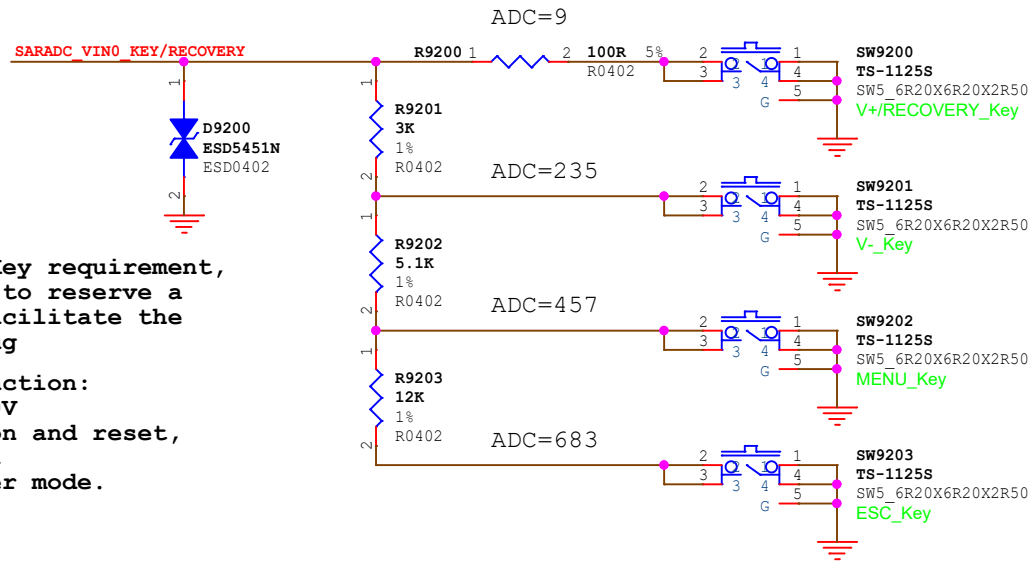

Note:

If there is no Key requirement,
It is suggested to reserve a
SW9200 Key to facilitate the
development debug

RECOVERY_Key function:
If SARADC_VIN0=0V
at after power on and reset,
then system will
enter into loader mode.

PowerOn/OFF_Key

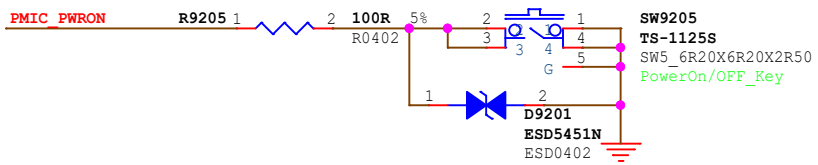

Reset_Key

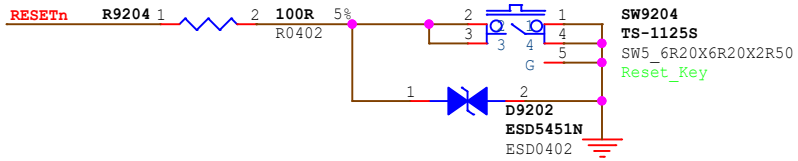

Rockchip Confidential

Rockchip 瑞芯微电子	Rockchip Electronics Co., Ltd				
Project:	RK3568_Tablet_REF_SCH				
File:	92.KEY Array				
Date:	Wednesday, September 27, 2023			Rev:	V2.0
Designed by:	Zhangdz	Reviewed by:	Default	Sheet:	60 of 62

SARADC_VIN1_HW_ID

SARADC_VIN3_BOM_ID

HW_ID

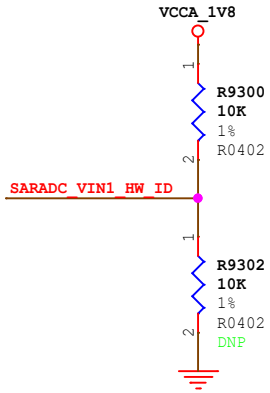

SARADC_VIN1	Up Resistance	Down Resistance
HW_ID0	10K	DNP
HW_ID1	10K	110K
HW_ID2	20K	100K
HW_ID3	33K	100K
HW_ID4	18K	36K
HW_ID5	36K	51K
HW_ID6	51K	51K
HW_ID7	51K	36K
HW_ID8	36K	18K
HW_ID9	100K	33K
HW_ID10	100K	20K
HW_ID11	110K	10K
HW_ID12	DNP	10K

BOM_ID

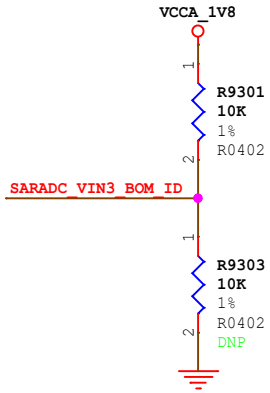

SARADC_VIN3	Up Resistance	Down Resistance
BOM_ID0	10K	DNP
BOM_ID1	10K	110K
BOM_ID2	20K	100K
BOM_ID3	33K	100K
BOM_ID4	18K	36K
BOM_ID5	36K	51K
BOM_ID6	51K	51K
BOM_ID7	51K	36K
BOM_ID8	36K	18K
BOM_ID9	100K	33K
BOM_ID10	100K	20K
BOM_ID11	110K	10K
BOM_ID12	DNP	10K

Rockchip Confidential

PCB Mark Point

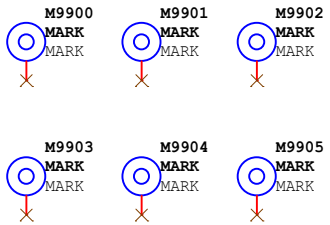

Mechanical Hole

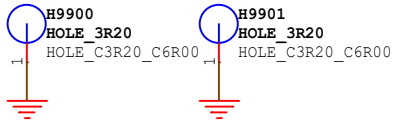

Heatsink

Shield

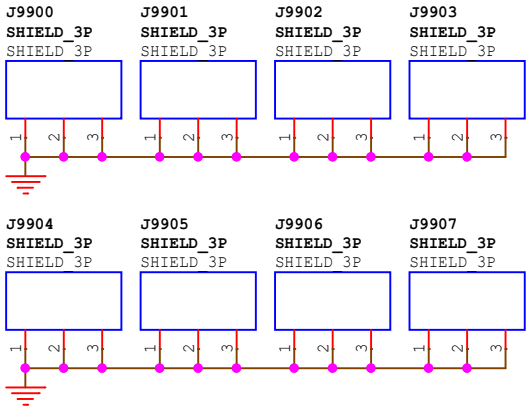

Rockchip Confidential

Rockchip 瑞芯微电子	Rockchip Electronics Co., Ltd				
Project:	RK3568_Tablet_REF_SCH				
File:	99.Mark/Hole/Heatsink				
Date:	Wednesday, September 27, 2023			Rev:	V2.0
Designed by:	Zhangdz	Reviewed by:	Default	Sheet:	62 of 62